RED ROOSTER
LIFTING

AIR HOIST
USER MANUAL

MODEL - TMH-37.5T

FRONT COVER

CONTENTS

INTRODUCTION & SPECIFICATION

SECTION 1: GETTING STARTED

1.1 UNPACKING & SPECIFICATION
1.2 OPERATION
1.3 CHECKS BEFORE USE & HOSE SUPPORT BRACKET
1.4 INSTALLATION
1.5 TECHNICAL CHARACTERISTICS
1.6 HOIST CHECKS
1.7 HOIST CONTROLS
1.8 ADDITIONAL INSTALLATION INSTRUCTIONS

SECTION 2: LUBRICATION

SECTION 3: SAFE OPERATION

3.1 HOIST OPERATORS & FORESEEABLE INCORRECT USE
3.2 SAFETY EQUIPMENT - PPE
3.3 LIFTING GEAR BELOW THE HOIST
3.4 MOUNTING ON TROLLEYS
3.5 OPERATIONAL BREAKDOWN OR ACCIDENT

SECTION 4: MAINTENANCE

4.1 GENERAL
4.2 REPAIRS
4.3 SILENCING
4.4 CHANGING THE SILENCERS
4.5 FITTING OR REPLACING LOAD CHAIN
4.6 TYPES OF CHAIN
4.7 HOIST COMPONENTS AND CHAIN
4.8 SERVICE DATA

SECTION 5: LAYING UP THE HOIST

SECTION 6: CHAIN COLLECTORS

SECTION 7: SPEED & LOAD LIMITER ADJUSTMENT

7.1 SPEED ADJUSTMENT
7.2 LOAD LIMITER

SECTION 8: OPERATIONAL BREAKDOWN / TROUBLESHOOTING THE TMH HOIST

SECTION 9: PERIODIC EXAMINATION & TESTING

9.1 EXAMINATION
9.2 SIX MONTHLY OFFSHORE INSPECTION
9.3 TESTING

SECTION 10: DUTY RATINGS

SECTION 11: EXPLOSION PROTECTION

SECTION 12: DATA SHEET

SECTION 13: DRAWINGS AND PARTS LISTS

SECTION 14: ACCESSORIES

SECTION 15: LOG BOOK

INTRODUCTION AND SPECIFICATION

Thank you for choosing the TMH pneumatic chain hoist.

Provided that the hoist is used and maintained in accordance with this manual it will afford you many years of reliable service.

Red Rooster hoists comply with the latest standards and are designed for safe and efficient operation.

Before installing the unit, please ensure that both the personnel responsible for installation, maintenance and operation are fully acquainted with the sections of this manual which are relevant to them.

This manual should be accessible at all times to the relevant person, in case of loss ask your dealer for a new copy.

SWL (TONNE)	MODEL	CHAIN FALLS	WEIGHT (KG)		FULL LOAD LIFTING SPEED (M/MIN)	FLR SIZE	MINIMUM HOSE SIZE (ID)
			3M HOL	EXTRA P/M			
25	TMH-25T	2	581	24.4	1.4	1 1/2"	1 1/2"
30	TMH-30T	2	581	24.4	1.0	1 1/2"	1 1/2"
37.5	TMH-37.5T	3	1300	36.6	0.9	1 1/2"	1 1/2"
50	TMH-50T	4	1800	48.8	0.7	1 1/2"	1 1/2"

Specification sheet gives full details of actual model supplied.
The nameplate fitted to the hoist gives the details to identify and gives further information on the hoist.

Notations: The following notations are used throughout this manual.

DANGER	Failure to follow this instruction may result in a dangerous occurrence or fatal injury
CAUTION	Failure to follow this instruction may result in premature wear of the hoist or a component part of the hoist

GETTING STARTED - UNPACKING & SPECIFICATION

1.1 UNPACKING THE HOIST

The hoist will have been palletised (see weight details in specification)
Handling of all models of hoist & trolley will require lifting equipment and shouldn't be moved by hand.

WHEN UNPACKING:

Ensure that both hoist and any ancillary equipment are recovered from the packaging. Small or delicate items may have been packed separately. Check the contents against the supplier's delivery note and advise the supplier immediately of any shortages.

Ensure that the hoist and ancillary equipment are undamaged. If the goods do not reach you in perfect condition, notify your supplier immediately of any damage. Do not proceed with installation if the goods are damaged. ⚠ **DANGER**

Ensure that a certificate of Thorough Examination together with a UKCA or a CE Declaration of Conformity is included with the goods. Hand these to a 'responsible person' for safe keeping. Check that the identifying mark (serial number), the Safe Working Load (Rated Load) and that the UKCA or CE marking appears on the hoist or hoist and trolley.

SUPPLIER / MANUFACTURER ADDRESS	Red Rooster Lifting Ltd Nauta House, The Meadows Oldmeldrum, Aberdeenshire UK, AB51 0EZ	Red Rooster Lifting Ltd Unit 26 Kelvin Way Trading Estate Kelvin Way, West Bromwich West Midlands, U.K. B70 7TW
TEL NO	01651 872101	0121 525 4162
MODEL	TMH-37.5T	
SERIAL NO		
SWL	37.5 Tonne	
DATE OF PURCHASE		

NAME PLATES
The name plate gives important information which must be retained. Hoist serial number, SWL, model, air pressure, air flow, hoist rating, chain size, speed, year of manufacture and the manufacturers name and address.

UK Ex / ATEX - Explosive protection
In the UK the use of non-electrical equipment in a hazardous area is covered by 'Products Intended for use in Potentially Explosive Atmospheres 2016 (UK SI 2016 No 1107 as amended by UK SI 2019 No 696)

In Europe and several other parts of the world the use of non-Electrical equipment in a hazardous area is covered by the ATEX Directive 2014/34/EU.

The main standards covering both the UK Ex and ATEX are currently the same: BS EN 80079-36, BS EN 80079-37, BS EN 1127-1 and BS EN 1127-2.

Standard hoists are suitable for use in ZONE 2 Gas areas certified as Ex Group II 3 G Ex h IIB T4 Gc
Standard hoists are suitable for use in ZONE 22 Dust areas certified as Ex Group II 3 D Ex h IIIB T135°C Dc

With extra protection can be used in ZONE 1 Gas areas certified as Ex Group II 2 G Ex h IIB T4 Gb
With extra protection can be used in ZONE 21 Dust areas certified as Ex Group II 2 D Ex h IIIB T135°C Db

Further protection allows the hoist to work in ZONE 1 Gas areas certified as Ex Group II 2 G Ex h IIC T4 Gb
Further protection allows the hoist to work in ZONE 21 Dust areas certified as Ex Group II 2 D Ex h IIIC T135°C Db
(not suitable for TCR Mini or TCS range, IIC or IIIC areas)

The following models can also be rated for mining (Ex Group I M2 Ex h I Mb) – TCR-500 to TCR-2000/2 and TMH models. These hoists can be used according to Equipment Group I Category M2 where equipment is intended to be de-energised in the event of an explosive atmosphere.

The TCR-250, TCR-500/2, TCS-500 and TCS-980/2 models cannot be rated for mining.

CERTIFICATION
All new hoists are supplied with standard certification: Thorough Examination, EU or UKCA Declaration of Conformity, which can include either ATEX or UK Ex certification where required. Other documentation is available by agreement.

IN THE EVENT OF ANY PROBLEMS OR SHOULD YOU REQUIRE ASSISTANCE CONTACT THE SUPPLIER AS DETAILED ABOVE QUOTING THE HOIST MODEL AND SERIAL NUMBER.

PACKAGING MATERIALS SHOULD BE RECYCLED OR DISPOSED OF ACCORDING TO LOCAL REGULATIONS.

1.2 OPERATION

Red Rooster pneumatic hoists and trolleys are designed for the lifting and lowering of loads within the capacity of the model selected. The range of hoists and trolleys can be UKCA, or CE marked and conform with 'Supply of Machinery (Safety) Regulations 2008 (As they apply to machinery being supplied in or into Great Britain from 1st January 2021) for UKCA marking and also the Machinery Directive 2006/42/EC for CE marking. At present both the UK and EU use the same standards with BS EN 14492-2 being the main standard for powered hoisting equipment.

Our range of hoists and trolleys are available as hook suspension units, trolley mounted, built into low headroom units and cranes. Nearly all hoist models are also available as Ex ZONE 1 or 2 hoists for use in hazardous areas, with corrosion protection, and can work in temperatures of -20°C to +60°C. When used outdoor or offshore hoists should be protected against the weather and examination and maintenance interval should be reduced.

Our hoists are extremely robust being developed over many years in the harshest of environments and will require little maintenance if kept lubricated on a regular basis. Noise levels can be found in the technical specification and as motor lubricating oil is supplied through the filter lubricator fitted to the hoist there will be a small amount of oil escaping into the atmosphere through the exhaust air: this can be piped away or collected using an exhaust cleaner. In certain circumstances and temperatures there is a danger of icing of the motor and exhaust silencer. This can be prevented by using an anti-icing lubricant such as Silkair or by fitting a dryer to the air supply to remove moisture from the air supply. Some anti-icing oil may damage air hoses and the o-ring in the hoist valve. ⚠ **CAUTION**

1.3 CHECKS BEFORE USE

These checks should be carried out during installation and on a frequent and regular basis thereafter. If the hoist is used daily then it is recommended that they are carried out daily as the checks take only minutes to complete and not only help avoid repair bills but significantly reduce the possibility of an accident or dangerous occurrence. Thoroughly examine the equipment prior to installation to ensure that no damage has occurred during transit. Hoists and trolleys should not be altered in any way without contacting Red Rooster for clearance, as this may affect the certification of the unit.

AIR SUPPLY CHECKS:

- Inlet pressure: 5 to 6 bar (there will be pressure losses across the air set and on long hoses) The supply pressure should not exceed 7 bar as this may affect the load limiter.
- Air flow: Check air flow requirement and minimum hose diameter also check that small bore fittings are not strangling the air flow.
- Keep the lubricator topped up with a light turbine oil (ISOVG3256).
- The filter should be checked regularly and manual units drained of water as required.
- **THE AIR HOSE SHOULD BE SUPPORTED SO THAT THE WEIGHT OF HOSE IS NOT HANGING FROM THE AIR SET AND `FITTINGS. THE AIR SET IS NOT DESIGNED TO SUPPORT THE WEIGHT OF THE HOSE. SEE PAGES 7 AND 12 IF A HOSE SUPPORT BRACKET AND MANIFOLD IS FITTED TO THE HOIST.**
- The air supply should be clean and relatively dry. Where the compressor produces a lot of water action should be taken to remove the excess water.
- Check air connection size and type are compatible.
- Check security of air hose connection.

AIR SUPPLY CONNECTION:
Every installation is different, so the correct method of supporting the air hose should be reviewed while installing the hoist. This needs to take into account the weight and size of the hose, obstructions both at deck and hoist level, connections, operating conditions and any likely movement of the hoist and air hose.
The fittings and filter lubricator are not designed to take the weight of the hose.
If the air supply hose length is over 10 metres the hose ID should be increased to the next size.

AIR SUPPLY:
Vane type air motors are designed to function using clean, dry, lubricated air. The installation of an 'in line' air service unit although essential cannot in itself compensate for serious contamination in the air supply. When operating the compressor in moist (humid) or dusty atmospheres seek the advice of your compressor supplier with regard to the fitting of a dryer and filter. ⚠ **CAUTION**

AIR PRESSURE:
The hoist is designed to operate best in the pressure range of 5 to 6 bar (72 to 90 p.s.i). The speeds quoted on the manufacturer's literature are obtainable only at 6 bar (90 p.s.i) inlet pressure. The hoist will operate at much reduced speed at pressures below this figure.

AIR FLOW:
Refer to the hoist data sheet, to select the hose diameter which ensures adequate air flow. Failure to provide adequate airflow will result in a pressure drop in the supply line and cause the hoist to stall and the brake to apply until the pressure increases. In addition, the brake will not release cleanly and will overheat. (Although not in itself a hazard [the brake fails safe] it may prove frustrating to the operator and a hazard may arise as a consequence.) ⚠ **CAUTION**

HOSE SUPPORT BRACKET:
Where a hose support bracket and manifold have been fitted to the hoist to take the weight of an air supply hose, several checks must be done.

- Check the hose hangs freely and does not interfere with the hoist chain.
- Check the hose is clear of the load to be lifted.
- Check the pendant hose is not obstructed by the air supply hose.
- Check the air hose is supported by the hose clamp / former / festoon system.

⚠ DANGER

- DO use exclusively correctly rated and certified pneumatic hoses and fittings in the air supply line.
- DO support the air line up to the hoist, as the fitting and filter / lubricator are not designed to take a load and may not support the weight of the hose.
- DO maintain the internal diameter (as per the table throughout the supply length) or reduce from the larger diameter to the smaller diameter in the direction of the hoist.
- DON'T use hydraulic fittings. These often have a reduced orifice size resulting in a down line drop in air pressure.
- DON'T increase from smaller to larger diameter or insert a length of smaller diameter hose in the supply line as this will result in reduced flow and pressure.
- DON'T create low points in the air supply line where water may be trapped (or if unavoidable install a drain tap).
- DON'T rely on pneumatic fittings to support airlines; they are not designed for this purpose.
- DON'T shorten the pendant by forming a loop or a coil. This will prevent the strainer wire from supporting the pendant and will cause the hoses to become detached or kinked.

1.4 HOIST ASSEMBLY

Normally our hoist or hoist and trolleys will arrive complete ready to be fitted into position, but sometimes for transportation it may be necessary to disconnect the chain collector, trolley or the pendant control system.

- Chain collectors will be supplied with the necessary bolts and fittings to assemble on site along with any safety slings as shown in section 1.8 and chain collectors in section 7.4.
- Due to the size of some trolleys it is easier to ship split from the hoist, the trolley GA drawings show the load bar and top eye details for refitting and the control and supply air lines are numbered or colour coded for re-connection.
- Where long controls are fitted to a hoist they are colour coded for re-connection on site.
- When lifting into position either use the lifting points on the hoist or hoist and trolley, if the hoist does not have lifting points fitted securely fit slings to the body of the hoist or use the top hook if possible. Do not lift by the controls, valves, or the air set.

⚠ DANGER

MOUNTING THE HOIST

The air hoist is designed as a LIFTING MACHINE and as such is designed exclusively for the lifting loads vertically. Non vertical lifting will result in premature wear of the chain and chain guide and may result in damage to the limit arms or a failure of the limit arms to operate.

- Site the hoist immediately above the load which is to be lifted.
- Ensure that the point from which the hoist is suspended has been designed and tested to at least the same safe working load as the hoist itself.
- Ensure that the suspension point or shackle fits snugly into the bowl of the hoist top hook and that the safety catch closes to prevent escape.
- Use only certified lifting gear with a SWL in excess of the load to be lifted to connect to the load itself.
- Ensure that the lifting gear fits snugly into the bowl of the hoist bottom hook and that the safety catch closes to prevent escape.
- Ensure that the control length (pendant or cords) is adequate to allow the operator to stand away from the load, in a safe and secure position with the cords or pendant at waist height.

CLOSE HEADROOM WORKING

The lower hook of the TMH hoist includes a swivel arrangement. This allows the load to turn without twisting the chain. However, when repeatedly handling loads with the bottom hook close to the hoist, especially when rotation of the load is prevented, there is tendency for the chain to attempt to enter the guide at an angle. This is particularly pronounced on two fall units. If this problem is noticed when doing a trial lift, a high quality ball bearing swivel should be mounted below the bottom hook of the hoist.

CHAIN COLLECTORS

If the hoist has been supplied with a chain bucket, and the chain has been stored within it during shipment, remove all the chain from the collector by hand, and remove any knots or twists.
In all cases carefully feed the chain over the load wheel allowing it to fill the collector without any interference as it emerges from the wheel. This way the collector will fill normally. If the chain within the collector is disturbed great care must be taken the next time that the chain is fed out of the collector to ensure that it is not twisted or knotted. Chain buckets are fitted with one or two brackets depending on the model and HOL of the hoist. ⚠ **DANGER** See additional instructions (Section 6) for large collectors.

1.5 TECHNICAL CHARACTERISTICS

The WLL of the hoist will be marked on the hoist name plate and also in the hoist specification supplied.
The reactions on the powered hoist on the support, runway beam or crane should have been taken into account in the design of the structure. The structure should be at least 25% stronger than when using manual equipment due to the shock loading applied by the operational speeds and the starting and stopping of the hoist.

All Red Rooster hoists are fitted with the following safety features

- Upper and lower mechanically operated travel limits. These are ultimate stops and should not be used to stop the hoist on a regular basis.
- Load limiting valve. After assembly and proof test the load limiting valve set is set to stop the operation of the hoist if an overload is detected. The hoist will stop lifting but will still lower the load.
- The disc brake is spring applied so when the controls are not operated or in the event of loss of air supply the brake is applied holding the load in position.
- On pendant controlled hoists an emergency stop button is fitted which connects to a normally open valve either located in the hoist valve chamber or connected to the hoist. When the emergency stop button is pushed or if the air supply to the hoist is cut off then the valve will close stopping the hoist.
- Red Rooster hoists have a 5:1 factor of safety.

1.6 HOIST CHECKS BEFORE USE

HOIST CHECKS (AIR SUPPLY OFF)

- Hook swivels satisfactorily and the safety catches work correctly.
- Load chain is undamaged and lubricated (light mineral oil).
- The load chain is not twisted through (two fall or more models) and that the load chain passed through the limit lever (All models).
- The load chain anchor is sound (both live and slack end).
- Check for damage to the hoist, pendant and control lines.
- Do not operate below -20°C or above 60°C without contacting Red Rooster.

HOIST CHECKS (AIR SUPPLY ON)

- The pendant buttons, levers or cords should be smooth to operate and return to neutral when released (hoist stops and does not run on).
- The hoist is run up and down on a regular basis. Where hoists are hanging in a dry and protected area they should be run weekly, where the hoist is outside and not protected it should be checked, lubricated and run daily.
- The emergency stop button / valve operates immediately.
- Upper and lower limit switches / levers work satisfactorily.
- Load chains run smoothly over the pocket wheel.
- The load chain should be examined periodically for cracks, gouges and wear.
- Chain collectors should be checked for security and chain capacity.
- Check chain runs in and out of the chain collector smoothly.
- For hoists with a long drop of chain or a large chain collector a separate suspension point may be required (see section 1.8).
- Cord control hoists should have the toggles marked for raise and lower.
- On cord controls check the spool valve returns to neutral and the hoist stops when the cord is released.(hoist stops and does not run on).
- Check the silencer is not partially blocked by comparing the running speed without load against the speed in the manual.

⚠ DANGER

NEVER RELEASE THE EMERGENCY STOP BUTTON UNTIL IT IS SAFE TO DO SO

Hoist swivels satisfactorily.
Hoist safety claws functional and undamaged.

Safety claw

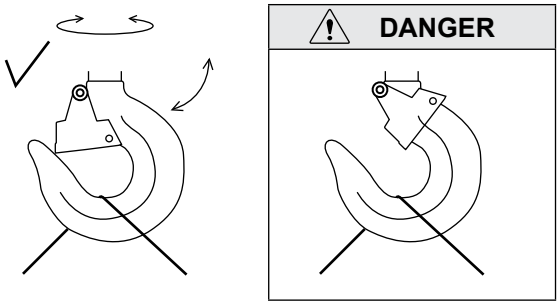

Chain undamaged
Chain not twisted through (two fall models see sketch)

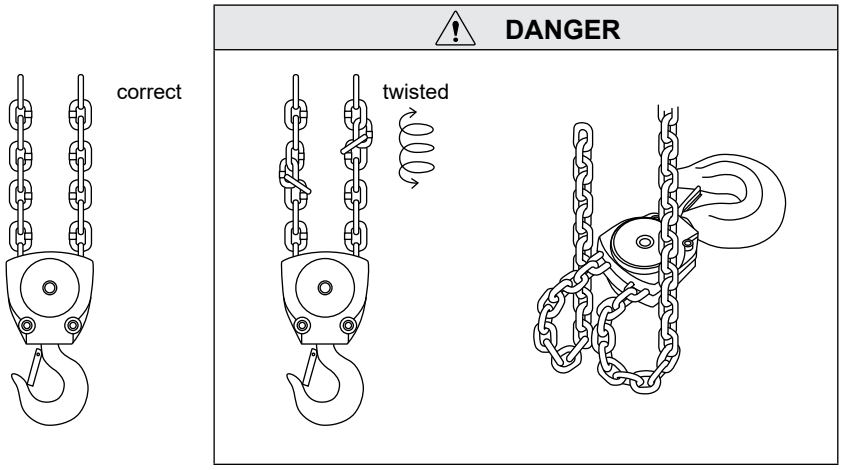

1.7 HOIST CONTROLS

Air hoists can be controlled by either a pull cord or a pendant control operating the spool valve of the hoist operating raise and lower. The diagram in section 1.8 shows the set up for both types of control and the location on the hoist body.

Cord or pendant hose lengths should be long enough for the operator to stand away from under the load but still with the cord toggles or the pendant suspended at a height of around 1 metre from the operating level. Where the controls have to be to the side of the hoist or where the operator cannot see the load travelling the full range of the lift a banksman should be appointed to assist the operator using a reliable means of communication.

Both toggles on the cord controls should be marked for correct operation of the hoist. The emergency stop button on the pendant control should also be marked.

1.8 ADDITIONAL INSTALLATION INSTRUCTIONS

Hook suspension with long chain drops.

Problem:
When a long heavy chain is fitted, and the 'raise' is pressed with the hoist in an unloaded condition, due to the centre line of the hoist having been affected by the weight of chain, the upper limit switch, may fail to operate. In addition, the slack load chain may on some modules foul the limit lever arms, thus preventing it from returning to the centre (neutral position).

Resolution:
A short length of wire rope, 6mm diameter, is fitted to the hoists and bulldog grips have been supplied.
Suspend the hoist in its final location and with as much chain as possible in use. Apply a small load to the hoist and lift it clear of the ground.
Connect the wire rope sling to the support steel alongside the top hook using bulldog grips.
The tension in this sling should be enough to counteract most of the weight of the slack chain produced in the fully raised position, but it must not be tensioned such that it is carrying any of the load supported by the hoist. i.e. if fitted correctly, in an unloaded condition, the sling will be tensioned with the hoist ALMOST in the vertical position. When the load is applied, the tension in the sling will be slack.

THE SLING IS NOT CAPABLE OF HOLDING THE LOADS CARRIED BY THE HOIST

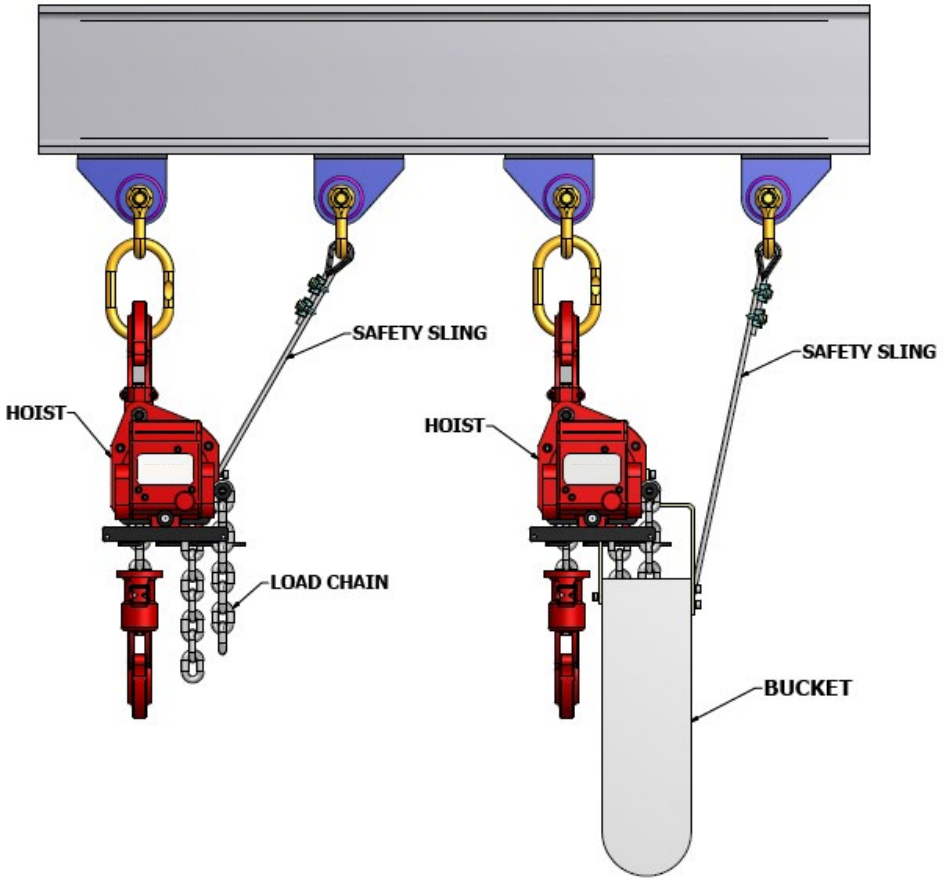

STANDARD HOSE CONNECTION PENDANT CONTROL OR HOIST WITH EXTERNAL EMERGENCY STOP VALVE

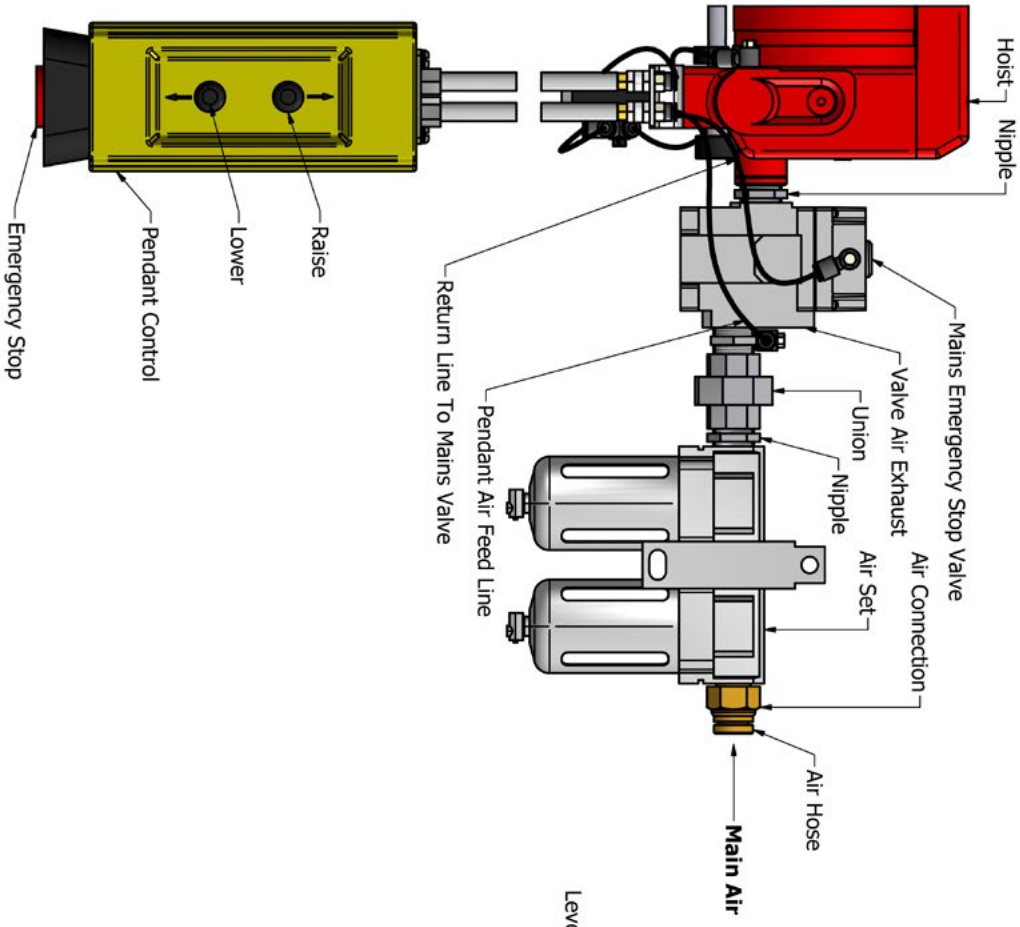

STANDARD HOSE CONNECTION CORD CONTROL OR HOIST WITH INTERNAL EMERGENCY STOP VALVE

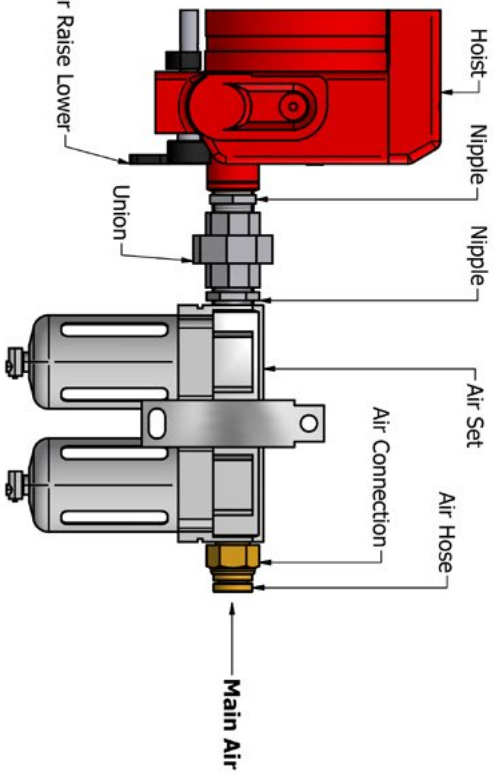

Air Hose Connection with Hose Clamp and Manifold

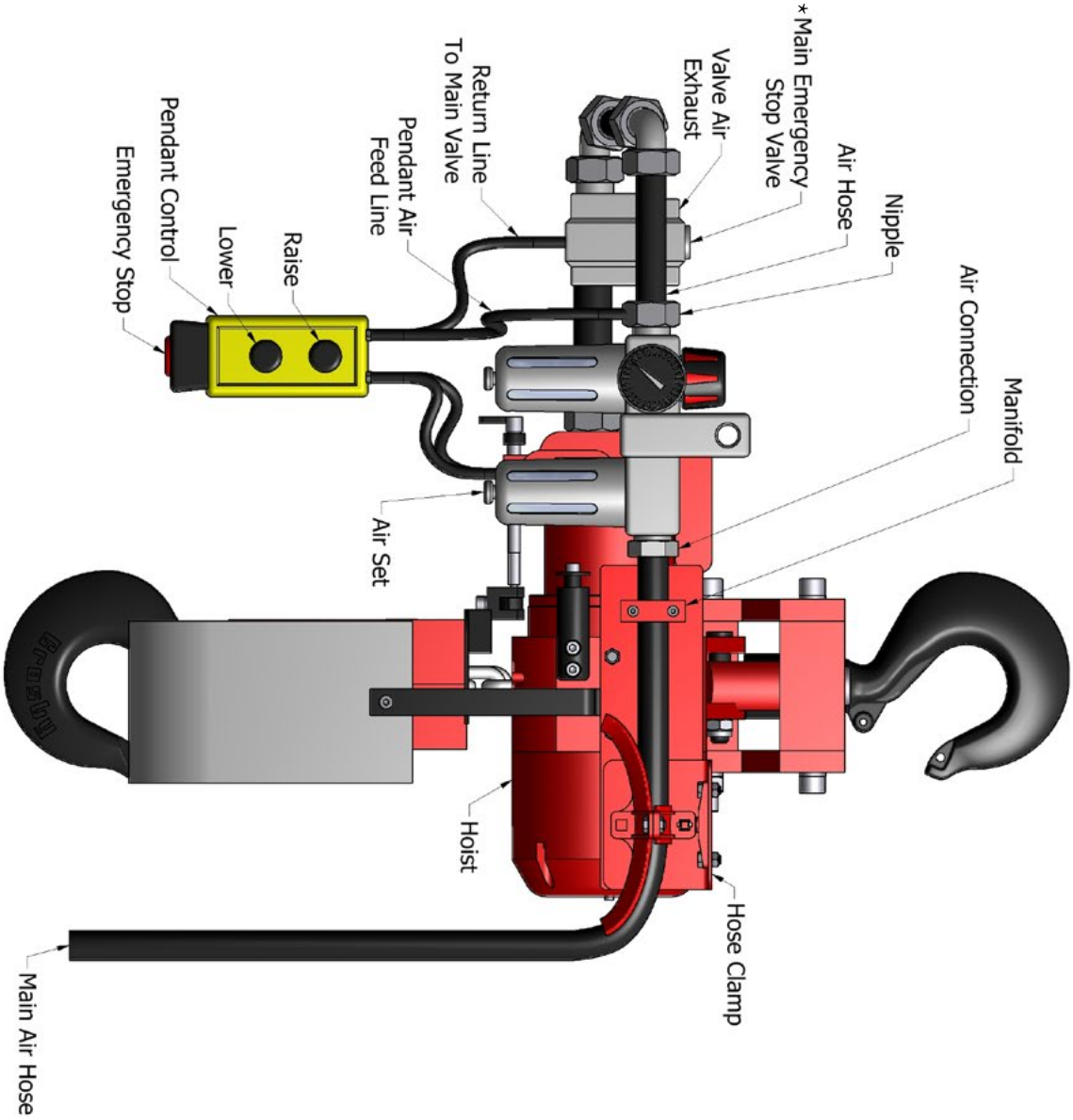

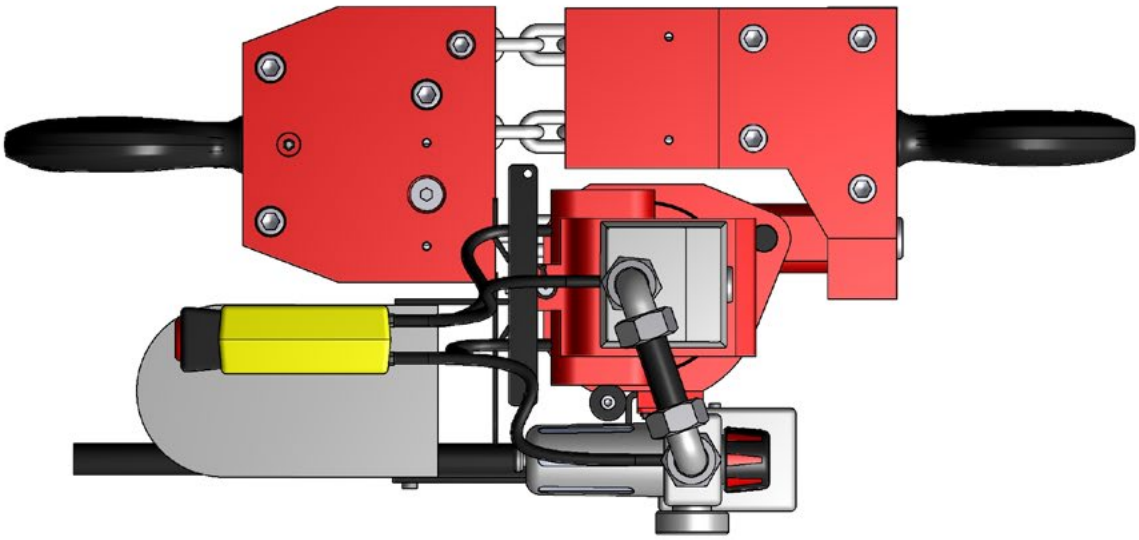

* Some hoists are fitted with internal emergency stop valves

LUBRICATION

2.1

Item	Oil Type	Frequency
Lubricator Unit Main Air Supply	Atlub Medium to light turbine oil ISO VG 32-56 Or any quality airline lubricant (See note 1)	10 to 15 drops per minute Do not allow lubricator to run out of oil
Load Chain	Normal industrial - any light mineral oil Clean areas - wax based, semi setting Food industry - suitable vegetable oil (See note 2)	Weekly / monthly subject to environment / use
Limit Lever Linkages and Anchor pins	No. 2 grease	Monthly or more frequently in aggressive environments
Gearbox	High temperature EP2 grease	Only at major overhaul

Note 1
In all cases oil will be expelled from the hoist exhaust. The amount discharged is proportional to the delivery rate of the lubricator. In environments where oil in the exhaust cannot be tolerated, the exhaust can be piped away to a safe area, but this requires specialist modification of the hoist (See air service equipment) - CONSULT YOUR DEALER. ⚠ **CAUTION**

Note 2
All Red Rooster hoist chain must be lubricated to prevent wear. ⚠ **DANGER**
Keeping load chain clean and lubricated will greatly increase the lifetime of the chain and prevent costly replacement. Very little lubricant is needed and can be easily applied to the chain by cloth, brush or spray.

In areas of high corrosion, plated chain can be used along with special lubricants to prevent corrosion from sea water and spray. Chains used in these areas should be re-lubricated on a regular basis.

NEVER use heavy grease or bitumen based products to lubricate the chain as these will foul the chain guide, idler and load wheels and bearings. ⚠ **DANGER**

Remove dust and water drops on the Load Chain and then apply lubricant. Application of lubrication influences on the life of the Load Chain considerably. Apply the lubricant sufficiently.

AIR SUPPLY FILTER, REGULATOR AND LUBRICATOR	LOAD CHAIN LUBRICATION
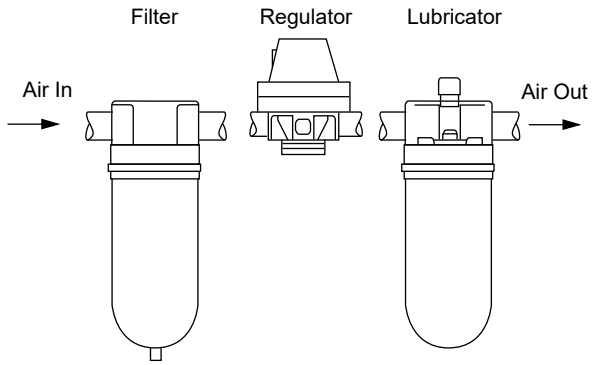	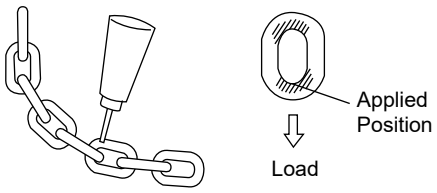

SAFE OPERATION

3.1 The contents of this section are designed for the guidance of personnel using the hoist. For the most part, they are 'common sense' procedures. Most dangerous occurrences involving lifting machines are not as a result of defect developing in the machine itself but are as a result of an error or act of carelessness by the operator. As such, the vast majority of accidents or dangerous occurrences are avoidable. The operator is responsible for his safety and the safety of others in the area of the hoist.

It is further recommended that only authorised personnel should be permitted to use the hoist and that all staff should be properly trained and have adequate knowledge in both safe use and visual examination.

ALWAYS - follow company procedures, work safely, report faults and comply with regulations.

⚠ DANGER

GUIDELINES FOR PERSONNEL USING AIR HOIST

- Read the instruction manual before use.
- Test run the equipment prior to application of a load and ensure that the equipment, including its control and safety devices are functioning correctly.
- Do not touch the hoist body immediately after extensive use, as it may be hot or very cold.
- Do not wear loose clothing (ties, scarves etc.) which may get dragged into the hoist or bottom block.
- Wear safety boots or shoes (together with a safety helmet if lifting overhead).
- Ensure that a positively engaged isolator requiring an appropriate operation to re-engage, is fitted between the air supply and the machine (lever, button or quarter turn valve). The isolator should isolate only the machine itself or where the safety of other machines may be affected by isolation of the machine, all machines affected must be isolated at the same time.
- Large hoists and trolleys have lifting eyes that can be used for handling and installation. Where no lifting eyes are fitted, a sling may be fitted round the hoist body using a choker hitch.
- Ensure that the load is securely supported by certified lifting gear (slings and shackles) with a higher safe working load in the configuration used, than the load to be lifted and that it cannot 'escape' whilst being lifted.
- Stand clear of the load when lifting or lowering and ensure that the point at which you are standing is secure. Do not touch moving chain.
- When there is a brief pause in the lifting operation where the operator lets go of the pendant control, he must stay in the area and make sure the pendant hangs vertically and cannot swing or get blown against anything.
- When there is a longer break in the lifting operation and the load has been landed, then the emergency stop button should be actuated so that a positive action is required before the hoist or hoist and trolley can be operated.
- If the hook is still attached to an item then a sign should be attached to the pendant and depending on the circumstances the power supply locked off.
- Ensure that other personnel cannot enter the immediate area where the lift is taking place.
- Never lift the load higher than necessary.
- Ensure that the control length (cord or pendant) is adequate to allow the operator to stand away from the load in a position to see the load at all stages of lift.
- The pendant should hang from the hoist and not be placed onto objects where the controls could be activated.
- If it is not possible to site yourself in a position where you can see the load at all stages, appoint a 'banksman' to cover the area which you cannot see and establish a reliable method of communication (verbal or hand signals) before starting the lift.
- If you suspect that the equipment is defective or is developing a fault, stop the lifting operation immediately.
- In the event of an emergency make the area safe by returning the load to a rest position, but if this is not possible the area should be cordoned off and the advice of your superior or safety officer sought. Never repair a hoist with the load suspended.
- If it is not possible to lower a load to the ground to make it safe, then a lifting plan must be in place to recover the load or make it safe in case of hoist failure.
- In the case of complex lifting operations a lifting plan must be in place to control the lift stipulating the hoists to be used, operating conditions, operator instructions and the different parts of the lift taking part in the agreed sequence. Carry out a practice lift with a small load if necessary to confirm the lifting operation.
- The starting and stopping of the hoist and taking up of slack chain at high speed can apply high forces which could be higher than the load being lifted. Always operate hoists smoothly and in a controlled manner.
- The attachment points must be capable of withstanding the expected forces.
- External vibration can affect the hoist and can cause damage and wear.
- Do not use the hoist outside in high winds, bad weather conditions, or when temperatures are likely to be outside the operating temperature of the hoist.
- Only use the hoist to make a lift safe when a warning alarm has been activated in the area and then isolate the hoist.

AT ALL TIMES THINK BEFORE YOU ACT - PLAN EVERY LIFT

SAFE OPERATION - HOIST OPERATORS

⚠ DANGER

3.1

- Hoist operators must be healthy and not under the influence of alcohol, drugs or medication when operating the hoist.
- Hoist operators should be trained in the operation of hoists proper rigging procedures for the attachment of loads to the hoist.
- The operator is always responsible for his own safety and anybody else in the operating area.
- Always start the lowering or lifting movement slowly and smoothly.
- When using the hoist jointly with another person, use signals agreed upon at the job site (standardized signals).
- When using the hoist without chain collector, avoid the slack chain to fall, catch or impact as this can cause hazards.
- In case of air pressure loss, secure the load and area. Ensure that turning the air supply back on cannot result in a dangerous occurrence.
- Stop using the hoist in case of abnormal sounds.

SAFE OPERATION - FORESEEABLE INCORRECT USE

⚠ DANGER **⚠ CAUTION**

3.1

- Where the supporting steel work transfers a vibration or oscillation through the hoist this can cause increased wear between the links of the load chain.
- Where the hoist or hoist and trolleys are fitted with lifting points they should only be used for lifting the hoist and trolley, they are not designed to take the full WLL of the hoist.
- Before carrying out any work on the hoist the main air should be turned off and the residual are vented or the hoist run to dissipate the air pressure.
- Do not exceed the stated SWL or duty rating. (Fig. A)
- Operate the hoist smoothly. Do not suddenly change direction as this may exert both shock loads acceleration forces may well in excess of the weight of the load being lifted.
- Do not use the hoist to lift / lower personnel. (Fig. B)
- Only use the hoist to lift a load vertically. It is not designed to pull or drag loads without modification and or a lift plan being used for special lifting operations, such as cross hauling. (Fig. C)
- Ensure that the load is securely supported by its lifting gear (slings shackles etc.) and that it cannot escape whilst being lifted.
- Ensure that the lifting assembly (slings, shackles etc.) has a higher safe working load in the configuration used than the load to be lifted.
- Ensure that the point at which the hoist is to be suspended has an equal or greater safe working load than the hoist.
- Ensure that the load is free to move and will clear all obstructions.
- Avoid swinging the load or hook.
- Do not use the hoist if the chain is damaged, twisted, kinked or worn.
- Ensure that the load is stable and in balance at starting lifting or setting down as tilting or falling loads can cause accidents.
- Never allow loads to “fall” into the load chain. (Fig. D)
- Never lock the control elements of the pendant or controls.
- Never use the chain, hooks or hoist as an electrical ground for welding or electricity.
- Do not use the limits as a means of stopping the hoist (these are safety devices).
- Do not use controls as a means of moving the hoist (the pendant is designed to support its own self weight only).
- Stand clear of the load when lifting and lowering and ensure that the point at which you are standing is safe and secure. (Fig. E)
- Do not hold onto the load chain when controlling a load (fit a tag to the load if necessary to ensure that the load is controlled).
- Do not apply a load to the tip of the Bottom Hook or the Hook Latch. (Fig. F)
- Do not bind a load with the load chain directly. (Fig. G)
- Do not operate the Load Chain while it is in contact with any sharp edges. (Fig. H)

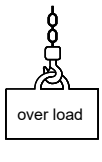

Fig. A

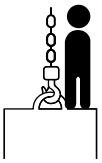

Fig. B

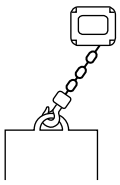

Fig. C

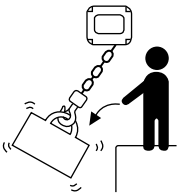

Fig. D

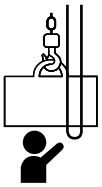

Fig. E

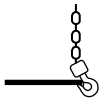

Fig. F

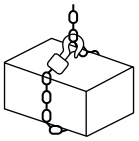

Fig. G

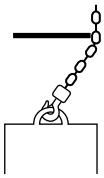

Fig. H

SAFE OPERATION

DANGER

3.2 SAFETY EQUIPMENT - PPE

Safe systems of work should be appropriate for the working conditions that the hoist is being used in with method statements stating what the hoist is being used for, the authorisation of staff to operate hoists and the PPE requirements in place. In general overalls, safety shoes, hearing protection and gloves are normal but other sites will require safety glasses and hard hats.

DANGER

3.3 LIFTING GEAR BELOW THE HOIST

Where lifting gear is connected into the bottom hook of the hoist it should be sized for at least the capacity of the hoist and physically fit well into the body of the hook allowing the safety catch to close.

Where a larger item such as a spreader beam is used this may have an effect on the lifting capacity of the hoist, so the SWL should be reduced to reflect this.

HOW TO SLING THE LOAD PROPERLY

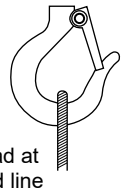

Sling the load at the extended line of the hook shaft

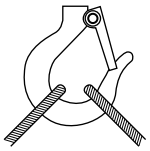

120º or less

DO NOT CARRY OUT DANGEROUS HOOKING AS SHOWN BELOW

Improper hooking position of the lifted load or the sling

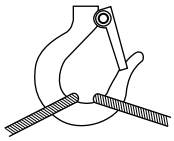

Angle exceeding 120º
Angle too wide

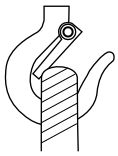

Unable closing of the hook latch

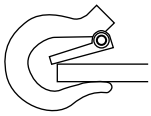

Hooking of the load at the tip of the hook

DANGER

3.4 MOUNTING ON TROLLEYS

- Ensure that the trolley is properly mounted on the beam and set correctly for the beam with adequate wheel clearance.
- Ensure that the stops for the trolley mounted on the runway beam are correctly positioned and securely installed.
- Ensure that the top hook or link plate of the hoist fits properly on the suspension point of the trolley and is assembled properly with the hoist at the centre of the load bar.
- Ensure that the load bar and tie bar nut have been secured and the trolley side plates are set parallel to the beam web.
- Ensure that the tie bars are correctly adjusted in the slots with the anti-tilt roller close under the beam with enough clearance to allow the trolley to run along the beam.

DANGER

3.5 OPERATIONAL BREAKDOWN OR ACCIDENT

If an unloaded hoist stops working then it should be removed from location and sent for repair if none of the remedies in the trouble shooting guide have an effect.

When the hoist is still holding a load then an additional hoist should be used to take the weight of the load so it can be safely lowered and the faulty hoist removed for repair. If another hoist cannot be used to lower the load it is possible to release the brake by slackening the brake cover screws but this should only be done by a RRL engineer or after discussions with Red Rooster as it is not always possible or safe to do so.

The main air supply line to the hoist should be fitted with an easily accessible valve to cut off the air supply to the hoist in case of emergency or for maintenance. Pendant control hoists also have a main air shut off valve.

There should be a safe access to the hoist to carry out maintenance, inspection and lubrication.

MAINTENANCE

4.1 The TMH range of hoists are heavy duty pneumatic hoists and built to require little maintenance if they are kept lubricated and maintained. The maintenance required will depend on daily operating times, the conditions, quality of the air supply and the percentage of the WLL regularly being lifted. The operators daily checks and the monthly maintenance checks are necessary to check the condition of the hoist. Maintenance work should be carried out by trained and qualified personnel. ⚠ **DANGER**

It is recommended that in the case of the TMH hoist and air trolleys inspections are carried out in accordance with the following schedule, although the frequency of the 'six month inspection' should be increased in high risk environments, aggressive environments or where the usage is particularly heavy to between one and three months. ⚠ **CAUTION**

EVERY DAY / WEEK (DEPENDING ON USAGE) ⚠ **CAUTION**

The items listed under 'checks before use' in Section 1 (Getting Started) of the manual should be examined.
It is recommended that the lubricator is 'topped up' as a part of this inspection routine.

AT LEAST ONCE PER MONTH FOR HOISTS IN CONSTANT USE OR EVERY THREE MONTHS LIGHTLY USED UNITS

⚠ DANGER

LOAD CHAIN - Thoroughly examine throughout its length for wear in the links, corrosion, cracks or distortion. If the wear in the links exceeds that stated in the chart, the chain should be replaced. If there are any visible cracks or distortion the chain should be replaced. Any wear should be measured and checked against section 10.1.

BRAKE - With a load applied check the brake efficiency. If there is any delay in actuation or slippage, the brake is defective and the hoist must be thoroughly overhauled before being returned to service.

HOOKS, SWIVELS AND CLAWS - Examine hooks for wear, deformation (refer to chart), nicks and gouges. Ensure that the hooks swivel smoothly and that the safety claw opens fully and closes under spring tension.

CHAIN ANCHOR PIN - Examine for wear and deformation.

NUTS AND BOLTS - Using suitable spanner and Allen key, check for any loose nuts and bolts.

UPPER AND LOWER LIMIT - Ensure that it functions correctly in both the fully raised and fully (chain lever) lowered positions.

CHAIN COLLECTOR - Check security and condition.

It is recommended that the load chain and linkages are lubricated as part of this inspection routine.

When repairing Red Rooster air hoists only original Red Rooster products should be used.

4.2 Only minor repairs such as silencers, safety catches, pendant repairs, replacing shorter lengths of load chain and inspections should be done in location after this the hoist should be lowered to ground level and taken to a workshop. ⚠ **CAUTION**

If the hoist is taken out of service it should be sent to an approved repairer to be fully dismantled, repaired and tested. ⚠ **CAUTION**

Only Red Rooster approved parts should be fitted to the hoist but good quality European or Japanese load chain and bearings can be used but other than that only Red Rooster supplied parts should be used. ⚠ **CAUTION**

Hoist and trolleys are heavy along with some parts of some hoist so suitable lifting equipment should be used to dismantle and assemble hoists. ⚠ **DANGER**

4.3 SILENCING

The TMH hoist is fitted with an internal silencer; the noise output being less than 82 dB at one metre (this conforms to E.C. noise regulations).

TMH-37.5T
These types are fitted with a 2 stage silencer; first stage comprises of a single piece of felt, the second stage comprises of 5 pieces of nylon and 2 pieces of felt..

The life expectancy of the silencer correlates closely with the quality of air supplied.

The nylon pad may be washed with de-greaser and re-used once decontaminated.

Periodic examination of the silencer is not required, nor is it recommended (see below). As the silencer becomes contaminated a reduced speed of operation will be noted. At this point the nylon silencer should be cleaned or replaced and the gauze silencer should be changed.

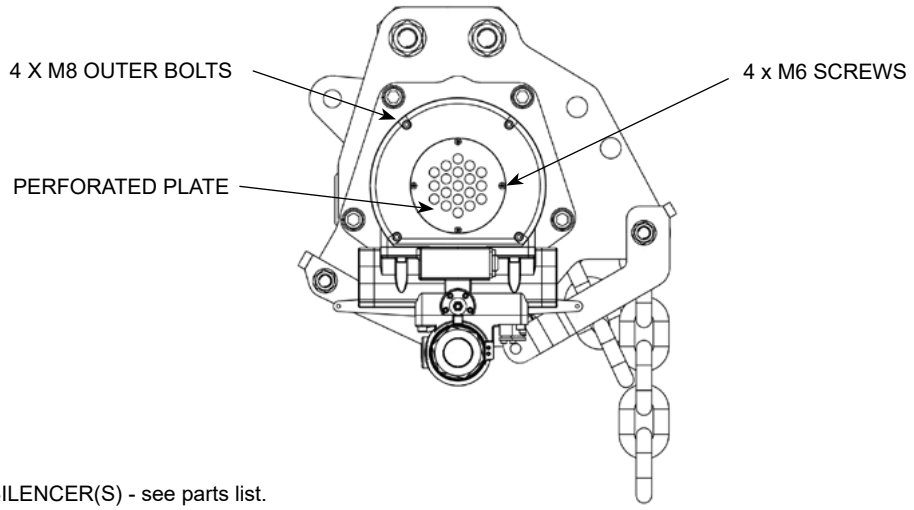

4.4 CHANGING THE SILENCER(S) - see parts list.

TMH-37.5T
Located on the end of the hoist above control valve is the exhaust cover. Remove the 4 x M6 screws to remove the perforated plate. Replace 2 x nylon and 1 x felt disc. Remove the 4 x M8 outer bolts holding the main exhaust cover on. Replace the 3 x nylon and 1 x felt pads.

The first stage silencer can only be replaced by Red Rooster Lifting trained personnel.

⚠ CAUTION

ADJUSTMENTS AND MAINTENANCE OPERATIONS

Before carrying out any work on the hoist the main air supply should be turned off and the residual air vented or the hoist run to dissipate the air pressure.

Red Rooster hoists normally do not require any adjustment as the brake springs take up any wear and the load limiter and limits should not need adjustment once set.

The lubricator should be checked and topped up weekly in normal use or daily when heavily used.

The load chain should be checked monthly for lubrication and oiled if necessary. Where the load chain is not lubricated for operational reasons the chain should be inspected weekly as a dry chain can wear rapidly.

The top and bottom hooks should only be lubricated if required during checks.

The hoist gearbox is greased during assembly or repair and should not need greased during operation.

There are no hazardous substances in Red Rooster hoists.

4.5 FITTING OR REPLACING LOAD CHAIN

The hoist will require to be hung up with an airline connected.

The chain must be fed over the pocket wheel from the slack end anchor side with the weld of every second link facing away from the wheel axis i.e. weld outwards.

Care must be taken not to twist the chain during installation. This is best achieved by holding the live end of the chain as it emerges from the hoist, if the hoist is reeved on two parts of chain, feed through the bottom block wheel and again as it emerges, thereafter feeding it up to the anchor pin. If the chain cannot be fitted to the anchor without rotating it through 90 degrees, the end link should be removed.

Run the chain through the hoist, leaving a short tail at the 'slack' end. Anchor the slack end without twisting the chain.

On single fall hoists the live end is secured in the bottom hook holder 4 x M12 cap head bolts and nuts.

Feed the chain over the load wheel.

It is very easy to trap or damage the chain if extreme care is not exercised. Always examine the first link of chain after passing it over the load wheel. If damaged, remove the damaged link(s). ⚠ **DANGER**

REPLACING EXISTING CHAIN

Cut away the centre portion of a link of the old chain to allow a chain diameter to pass through. Connect the spare link to the last link of the old chain and the first link of the replacement chain. Use the old chain to draw the replacement chain though the hoist. (Retain the spare link to be re-used). ⚠ **DANGER**

FITTING CHAIN TO AN UNCHAINED HOIST

A handy tool comprises a length of either soft insulated wire (about 2mm diameter) or a piece of flexible nylon tube of the same diameter approximately 500mm long. To the end of this attach a similar length of strong twine.

The soft wire or tube is fed over the wheel, its flexibility allows it to follow the chain guide and re-emerge at the opposite side. The twine is attached to the end of the chain and drawn through, pulling the chain against the wheel. By applying power VERY SLOWLY in the same direction of winding, the load chain is dragged into the first pocket and over the load wheel. If any resistance is felt as the chain attempts to enter the pocket it is imperative that the chain is released from the pocket before trying again. Otherwise the chain will become trapped and damaged. ⚠ **DANGER**

Only use quality load chain approved by Red Rooster for use on our hoists.

⚠ **DANGER**			
ITEM	CHECK METHOD	CRITERIA	WHEN FAILED
Deformation Flaw Entanglement	▪ Check visually 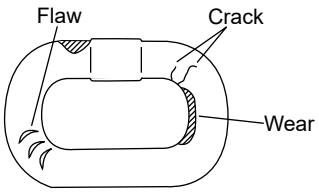 ▪ Check visually for no foreign matter as attached sputter.	▪ No deep notch ▪ No deformation such as twist ▪ No attached sputter ▪ No entanglement ▪ No crack ▪ Wear (see 4.6 + 4.8)	Replace the load chain

4.6 TYPES OF CHAIN

Only the correct size and grade of load chain should be used. ⚠ **DANGER**
All chain is to EN818/7 - ANNEX B

TMH-37.5T	HEAVY DUTY	
	RUD RT+	
Nominal diameter:	23.5 + 0.3 / - 1.1	mm
Pitch:	66.0 + 0.7 / - 0.3	mm
Max dia at weld:	24.6	mm
Min breaking force:	750	kN
Surface hardness:	ca390-420HV10	
Grade:	EN818/7 ISO 3077	

When supplied new, only quality chain from a reputable supplier has been fitted to the hoist. Your supplier will be able to offer replacement chain of like quality.

HOIST COMPONENTS AND CHAIN

4.7 TMH-37.5T

CHAIN FITTINGS

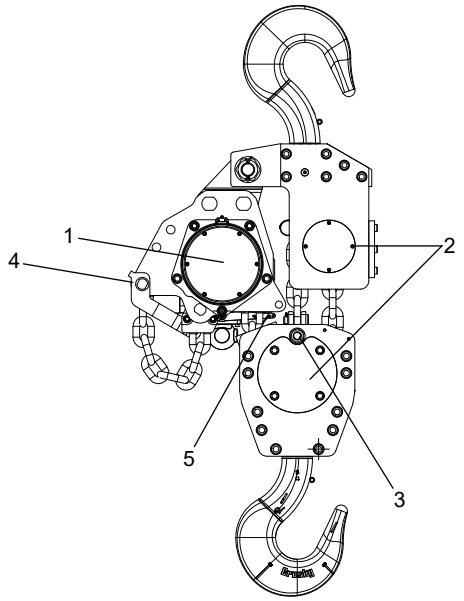

1	Load Sheave
2	Idle Sheave
3	Live End Chain Anchor
4	Dead End Chain Anchor
5	Welds Away From Chain Anchor
6	Limit Lever (Up)

TMH-37.5T

HOIST PARTS

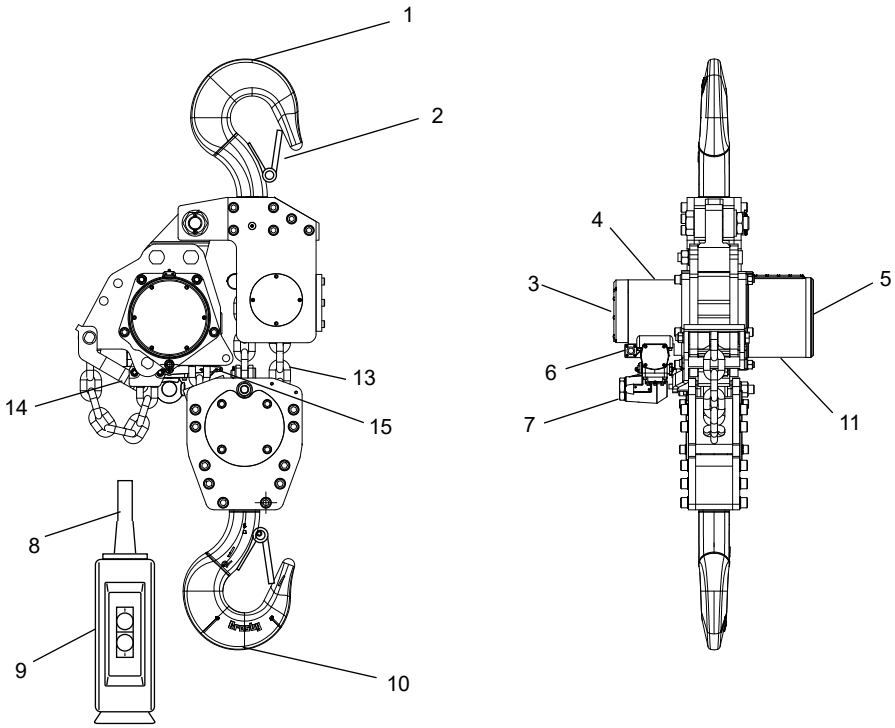

1	Upper Hook
2	Hook Safety Latch
3	Silencer Section
4	Motor Section
5	Brake Section
6	Load Limiter
7	Valve Section
8	Pendant Hose Set
9	Pendant Control with E/Stop
10	Lower Hook
11	Gear Box
12	Hanger Eye for Lifting the Hoist
13	Chain
14	Limit Lever Lowering
15	Limit Lever Lifting

SERVICE DATA

Maintenance chart
TMH-37.5T

NO.	DESCRIPTION	CHECK POINTS	STD DIMENSIONS & MAX FOR REPLACEMENT
201	First Pinion	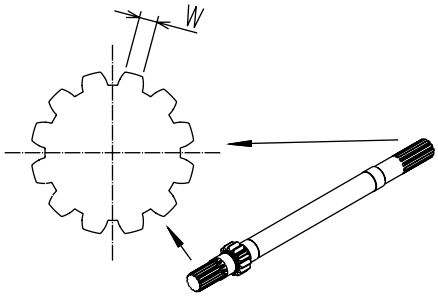	STD W = 1.75mm MIN W = 1.5mm Replace when less than MIN limit
201 202 204 205 206 208 209 210 212	First Pinion First Star Gear First Ring Gear Second Pinon Second Star Gear Second Ring Gear Third Pinion Third Star Gear Third Ring Gear	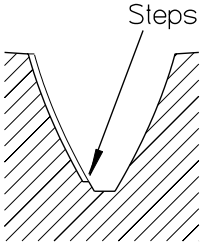	When there is steps on the tooth due to wear, replace them.
115	Coupling	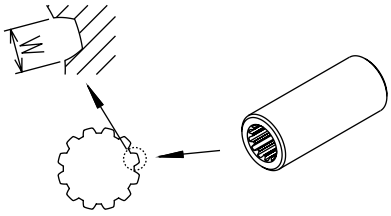	STD W = 2.6mm MAX W = 2.8mm Replace when more than MAX limit
111	Chain Guide	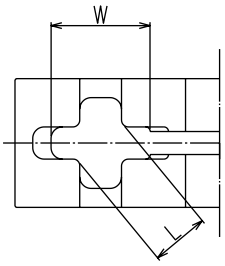	STD L = 50.5mm MAX L = 54.5mm STD W = 86mm MAX W = 88mm Replace when more than MAX limit. Replace when it has cracks or critical damage as well
		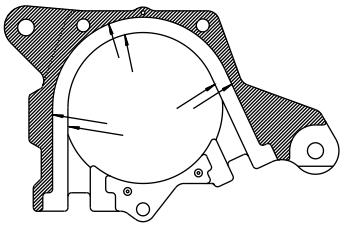	Wear limit = 2mm Replace when more than limit Replace when it has cracks or critical damage caused by chain
113 259	Load Sheave Free Chain Wheel	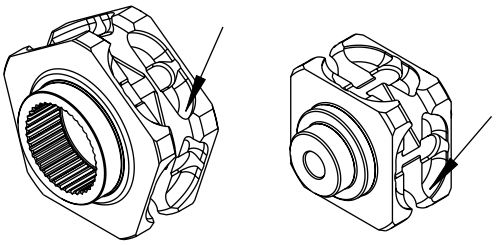	Replace when Sprocket part has wear or having a critical damage

SERVICE DATA

Maintenance chart
TMH-37.5T

NO.	DESCRIPTION	CHECK POINTS	STD DIMENSIONS & MAX FOR REPLACEMENT
203 207 211	First Pin Second Pin Third Pin	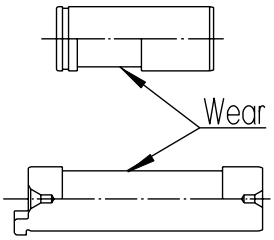	When there is steps on the pin due to wear, replace them When replacing Pin, replace Needle bearing as well
209 213	Third Pinion Cage	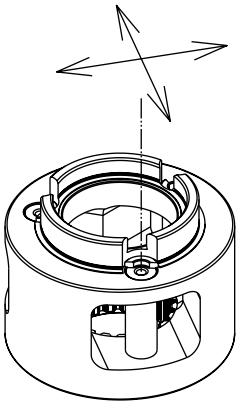	Insert Pin and replace if there is much play
66	Vane	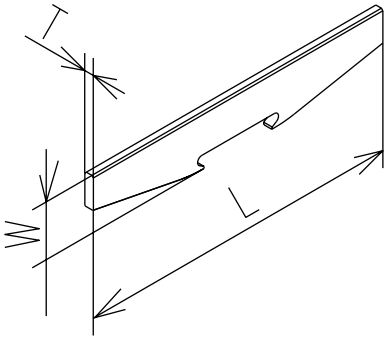	STD L = 170mm MIN L = 168.5mm STD W = 30mm MIN W = 28mm STD T = 5mm MIN T = 4.5mm Replace when less than MIN value When replacing vane, replace lift spring as well.
63	Rotor	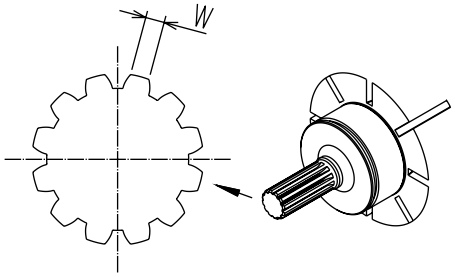	STD W=1.75mm MIN W=1.5mm Replace when less than MIN limit
152	Brake Disc	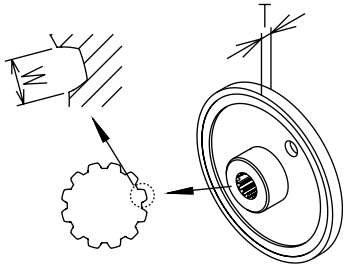	STD T = 8mm MIN T = 7.3mm Replace when less than MIN limit STD W = 2.6mm MAX W=2.8mm Replace when more than MAX limit

SERVICE DATA

Maintenance chart
TMH-37.5T

NO.	DESCRIPTION	CHECK POINTS	STD DIMENSIONS & MAX FOR REPLACEMENT
250	Hook	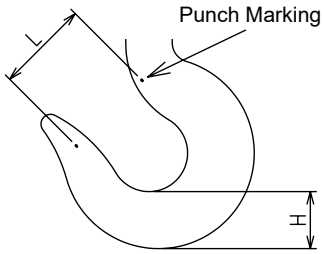	When the opening of the hook exceeds original length, replace the parts. Replace part when H reduces by 2 mm Replace when measured value is more than limit. Repair or replace hook that do not rotate lightly. Make sure safety claw works rightly.
250 255	Hook Hook End Piece	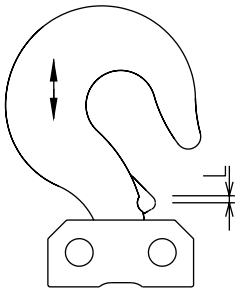	Replace both Hook and Hook end piece when L (play) exceeds 4.5mm.
275	Under Hook Holder	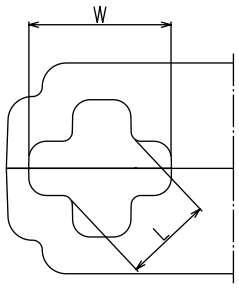	STD L = 55mm MAX L = 58mm STD W = 89mm MAX W = 91mm Replace the one more than MAX limit. Replace when it has cracks or critical damage as well.
		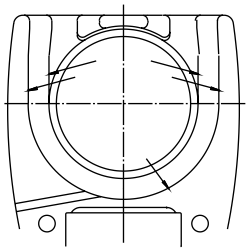	Wear limit = 2mm Replace the one more than wear limit Replace when it has cracks or critical damage caused by chain
141	Load Chain	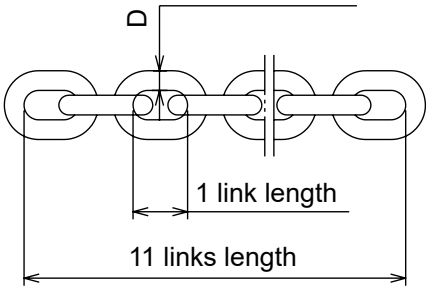	1 link length STD = 66mm MAX = 69.3mm Replace if exceeds MAX dimension. 11 links length STD = 726mm MAX = 740.5mm Replace if exceeds MAX dimension. STD D = 23.5mm MIN D = 21.2mm Replace if D is less than MIN dimension Also replace if the link chain is severely damaged.
		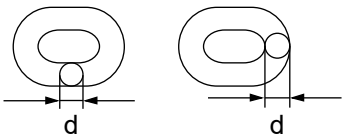	Measure the chain diameter (d) with point caliper.

LAYING UP THE HOIST

5.1 LAYING UP THE HOIST

Whenever the hoist is unused for a period (weekends, holidays or in store), a little preparation will ensure that the hoist operates correctly and safely, either before being put into service for the first time or when being put back into service after a layup.

SHORT LAY UP PERIOD (2 TO 90 DAYS):

Air hoists should be kept clean, lubricated and stored in a clean and dry location.
When not in use seal off from the air supply inlet and run extra oil through the hoist as per lay up instructions.
Wherever possible keep the hoist protected when in use and installed in an exposed location, protecting controls and hoses from damage.

Turn up the oil delivery rate of the lubricator to maximum and run the hoist for two minutes, thereby ensuring that the hoist motor and control valve are well lubricated. (This also helps to displace any water which may be lying in the hoist). ⚠ **CAUTION**

LONG TERM LAY UP PERIOD (3 MONTHS TO 24 MONTHS):

- Heavily lubricate the hoist as specified above.
- If the hoist is contaminated with dirt or chemicals, wash with a propriety mild solvent or detergent and thoroughly rinse off with fresh water. Allow to dry and spray lightly with penetrating fluid.
- Lubricate the load chain, limit shafts, safety latches, and hook swivels.
- Disconnect the air supply and plug the inlet port.
- If required, dismantle the chain collector, pendant, air set and trolley for storage.
- Store in a dry ventilated area.
- Secure hoist in a crate or suitable pallet.

Transportation - Moving your Red Rooster hoist between locations.
Carefully disconnect from suspension point and lower under control to ground level.
Be sure that chain collector, valves and trolley drives are not damaged.
Carefully lay the pendant on top of the hoist making sure tubes or hoses are not damaged.
Secure the hoist and chain to the shipping container or pallet.

For long term storage corrosion inhibitors (wax coatings) can also be applied to suitable surfaces and then removed before use.

Before connecting the air supply line to the hoist, pour 5 to 10 cc of Atlub air tool oil directly into the airline to ensure that oil is present in the motor startup. ⚠ **CAUTION**

If being stored long term especially outside ask for a copy of the full procedure - AHLU-15

CHAIN COLLECTORS

6.1 When supplied new the chain bucket will have been sized to suit the HOL of the hoist with spare capacity to allow for some bunching up of the chain. The use of a chain collector can make the operation of the hoist more efficient preventing dangerous occurrences with the chain getting caught or falling from the load being lifted as it mounts up on top of the load.

On hoists from 9 tonne and above galvanised chain collectors are used, with stainless steel buckets being used on UK Ex / ATEX hoists and in areas of high corrosion.

On arrival at site the load chain should be removed from the chain collector either manually or by carefully running out of the hoist checking for snagging. The chain should then be run back into the collector by the hoist checking there are no twists in the chain that the bottom hook is not twisted through the chain fall on multi-fall blocks. ⚠ **CAUTION**

Hoists with long drops of chain and heavy loads in the chain collectors will require a secondary suspension point to hold the hoist in a vertical position when unloaded. These may be as shown in section 1.8 or a secondary trolley on a runway beam. ⚠ **CAUTION**

If operating without a chain collector the slack end of the chain may catch or get caught on top of a load.
Always make sure the unloaded chain is running freely.

⚠ DANGER

- Do not exceed the chain collector capacity.
- When the load chain is dry it may not run freely into the chain collector and over fill the collector, so the chain must be kept lubricated to prevent it running out of the collector.
- Make sure the chain collector brackets have not been damaged during installation.
- Make sure the chain collector is free to move when the hoist is loaded and un-loaded.
- Make sure the bottom hook does not connect with the chain collector. Limit the lifting height of the bottom hook if necessary.
- For any assistance required on chain collectors please contact Red Rooster Lifting Ltd.

CHAIN COLLECTORS

TMH-37.5T

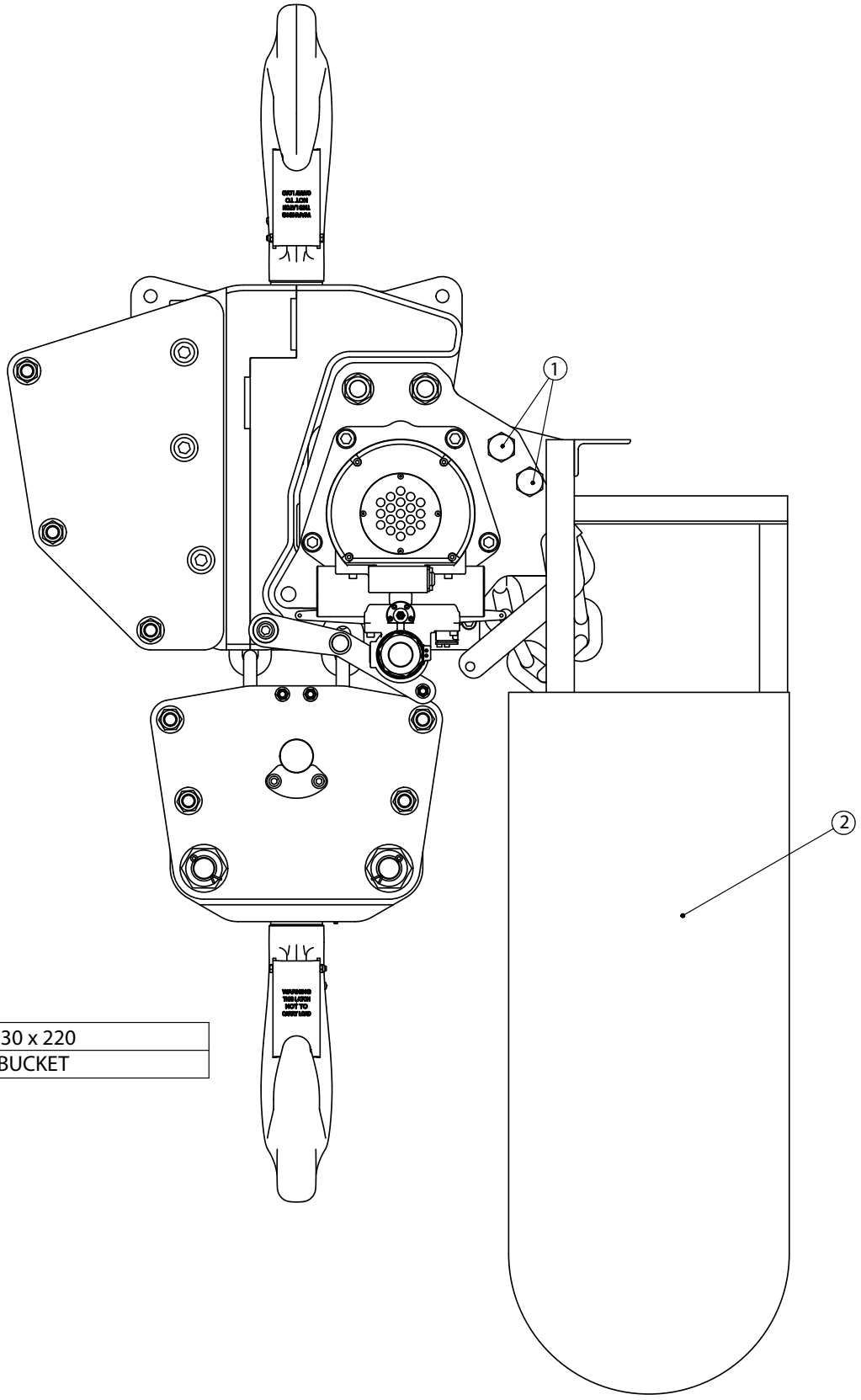

1	BOLT M30 x 220
2	CHAIN BUCKET

SPEED & LOAD LIMITER ADJUSTMENT

7.1 SPEED ADJUSTMENT

Every TMH hoist is checked at the factory to ensure the maximum hoisting speed is in accordance with the specification.

CORD CONTROL HOIST

The speed of the hoist is proportional to the amount of downward movement in the control cord, which via the cord lever controls the amount by which the valve is opened.

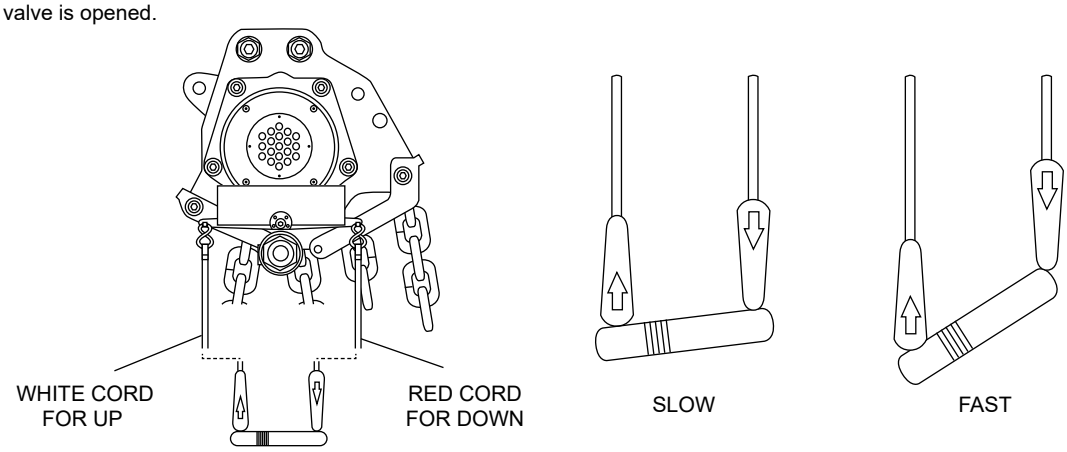

On every TMH hoist the load limiter is factory set to operate at a load ten percent in excess of the safe working load, at an operating pressure of 6 bar. Unless a lower supply pressure is to be used, the load limiter will not require adjustment.

All models in the range incorporate an adjustable load limiter

HOW IT WORKS

Located adjacent to the control valve, the load limiter measures the pressure drop across the motor which is proportional to the load on the motor. Once the pressure drop is increased above that of the load limiter setting, the brake is applied and the hoist will not lift the load. In this case the load should then be reduced or a larger capacity hoist installed. The load can still be lowered when the load limiter cuts in.

⚠ CAUTION

Verify that the Chain / Limit Levers are operational and can move freely in both the up and down directions.

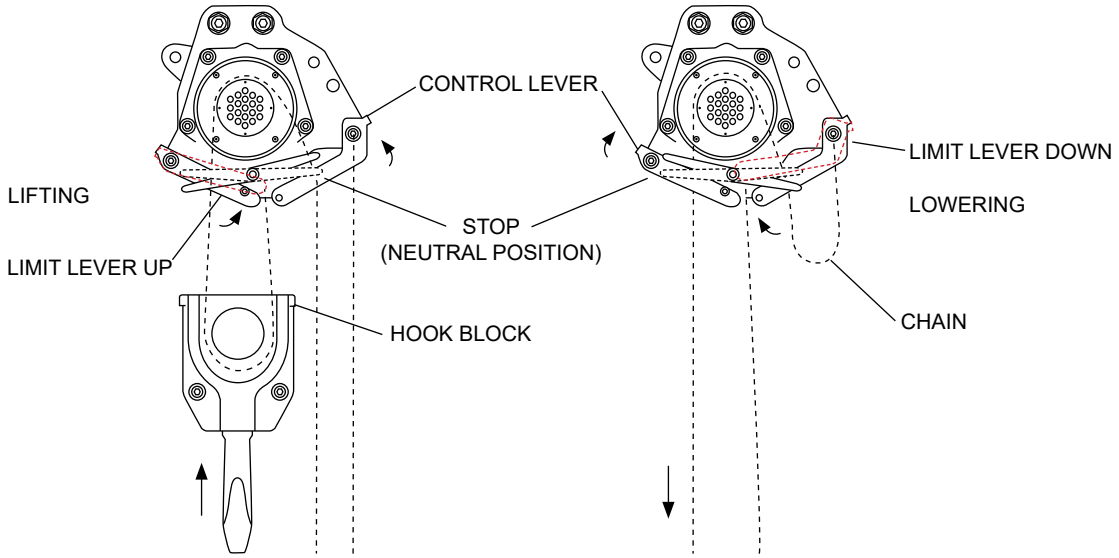

7.2 SETTING THE LOAD LIMITER

Viewing the hoist from the motor end, the load limiter adjusting screw (M6 hex) is located on the left hand side on the valve cover. It is locked in position with an M6 nut. Back off the lock nut before commencing adjustment.

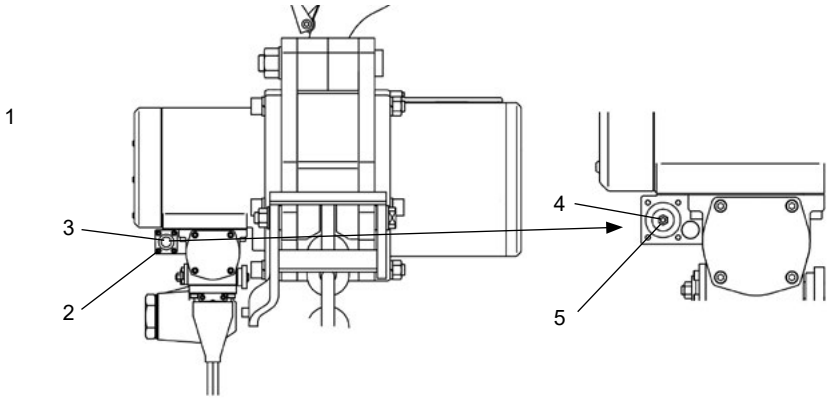

1	Do not remove this cover!	4	Lock Nut
2	Hex Socket Head Cap Screw	5	Adjustment Screw
3	Cover		

- Set the regulator pressure to that which will be used during operation (normally 6 bar to 90 p.s.i).
- Turn the adjustment screw anti-clockwise until no resistance is felt and then turn clockwise until the internal spring starts to resist.
- Apply the safe working load in the hoisting mode slowly and then at full speed. The hoist will stop automatically.
- Rotate the screw one turn in a clockwise direction and again engage the hoisting mode.
- Continue, one rotation at a time until the load limiter fails to stop the hoist.
- Turn the screw 3/4 turn anti-clockwise and ensure the load limiter is operating at this point. (If not continue in an anti-clockwise direction a fraction of a turn at a time until the load limiter operates.
- Turn the screw a further quarter of a turn anti-clockwise and tighten the lock nut.
- The load limiter is now set. A significant change in the operating pressure from that selected will necessitate adjustment of the load limiter.
- The maximum travel of the adjustment screw is approximately eight turns, If adjusted to this point, the load limiter will not operate.⚠ **CAUTION**

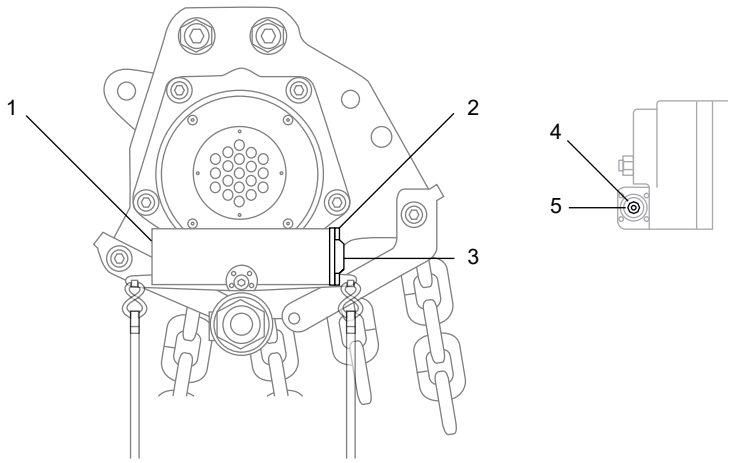

OPERATIONAL BREAKDOWN / TROUBLESHOOTING THE TMH HOIST

8.1 We list below a number of faults which may occur during use, together with the probable cause and the cure. If you experience a fault and cannot identify the cause, or if you do not feel confident to remedy the fault, please revert to your hoist supplier

Description of fault noted	Possible cause of fault	Remedy
Does not operate (Valve does not work)	Lack of air pressure	Adjust air inlet pressure (6 Bar)
	Damage of Pendant hose	Replace pendant hose
	Foreign material is stuck in pendant or piping part	Remove the foreign material
	Rust of valve part	Replace the defect part
	Limit shaft is stuck by rust	Replace Limit shaft, Limit shaft bush
	Over tightening assembly bolts of valve body	Re-tighten bolts with right torque
	Damage of O-ring in Valve part	Replace damaged O-ring
Does not operate (Valve works)	Lack of air pressure	Adjust air inlet pressure (6 Bar)
	Incorrect assemble of Valve bush	Reassemble Valve bush
	Defective part in Motor	Replace part
	Defective part in Gear	Replace part
	Brake is not released due to damage on O-rings and packing	Replace defective O-ring, gasket
Lifting and lowering speed is slow	Lack of air pressure	Adjust air inlet pressure (6 Bar)
	Hose is too long, or size is small. Or air pressure loss due to using quick coupler	Adjust hose length, or change hose and piping part
	Foreign material is stuck in pendant or piping part	Remove foreign material
	Incorrect assemble of Valve bush	Reassemble Valve bush
	Damage on Pendant hose	Replace Pendant hose
	Lack of Oil	Adjust quantity of oil
	Silencer parts are clogged	Clean each silencer or replace
	Defective parts in Motor	Replace defect part
	Defective parts in Gear	Replace defect part
	Brake is not released due to damage on O-rings and packing	Replace defective O-rings and packing
	Air pressure for Valve releasing is not enough due to using long pendant hose	Adjust the set up for long pendant hose
Operation does not stop despite releasing pendant lever or cord	Over tightening of valve body assembly bolts	Re-tighten bolt
	Limit shaft function is disturbed due to rust etc.	Replace Limit shaft, Limit shaft bush
	Damage on O-ring in Valve part	Replace defective O-ring

OPERATIONAL BREAKDOWN / TROUBLESHOOTING THE TMH HOIST

8.1 Continued

Description of fault noted	Possible cause of fault	Remedy
Cannot lift or lower rated load	Lack of air pressure	Adjust air inlet pressure (6 Bar)
	Hose is too long, or size is too small. Or air pressure loss due to using quick coupler	Adjust hose length, or change hose dia and piping part
	Damage on Pendant hose	Replace hose
	Foreign material is stuck in pendant or piping part	Remove foreign material
	Defective operation caused by rust of Valve part	Replace defective part
	Limit shaft does not move smoothly due to rust	Replace Limit shaft and Limit shaft bush
	Incorrect assembling of Valve bush	Reassemble Valve bush
	Adjustment of Load Limiter is not correct	Adjust Load limiter as per section 7.2
	Silencer parts are clogged	Clear each Silencer or Replace
	Defective parts in Motor	Replace defective part
	Defective parts in Gear	Replace defective part
	Brake is not released due to damage on O-rings and packing	Replace O-ring and Gasket
Cannot perform slow speed operation or not continue	Damage on O-ring in Valve part	Replace defective O-ring
	Limit shaft function is disturbed due to rust etc.	Replace Limit shaft, Limit shaft bush
	Defective Lift spring in Motor part	Replace Lift spring
	Over tightening of adjust screw of pilot air	Adjust the set up for long pendant hose
	Defective bearing on Limit lever	Replace Bearing
	Defective parts in Motor part	Replace defective part

PERIODIC EXAMINATION AND TESTING

9.1 EXAMINATION

UK & European Law requires that a thorough examination of the hoist should be carried out by a competent person:

- Before being put into service.
- At a frequency not exceeding 12 months (6 months for equipment used offshore).
- After being put into service at a new site.
- After involvement in an accident or dangerous occurrence.
- After a significant change in the conditions of use.
- After long periods out of use (time not specified).

Lifting operations and lifting equipment regulations 1998, section 9 refers. (LOLER 1998 №2307)

The record of such examination must be retained for as long as the employer continues to operate the equipment. The regulations also call upon the employer to carry out a risk assessment; to adjust the frequency of inspection according to the potential risk, to determine the nature of inspections and to ensure that the persons carrying out the inspection are competent to do so.

9.2 SIX MONTHLY OFFSHORE INSPECTION

Arrange to have the hoist examined by a person specifically trained and experienced in the examination of lifting machines. This can be done by a Red Rooster engineer or an independent competent person. Ensure that the party is operating to a detailed inspection procedure or code of practice.

SERVICE

We would recommend the hoist is returned every 5 years for a full inspection and service.

9.3 TESTING

LOLER 98, section 4 calls for the employer to ensure that the hoist is of adequate strength and stability for each load. No frequencies or test or proof loads are specified.

In the case of the TMH hoist the hoist is functionally tested with a proof load of 125% of the safe working load prior to delivery (Test certificate refers).

It is recommended that the test is repeated along with a thorough examination if the hoist is substantially repaired (i.e. any repair which may affect the hoists ability to lift, lower and sustain a load).

REPEAT PROOF LOAD TESTING OF THE HOIST SHOULD BE AVOIDED

NOTE!
If your hoist is a “spark resistant” zone 1 version; check the bronze coating of the lower and upper hook on signs of wear. A worn out coating is NOT spark resistant anymore and can cause dangerous situations. Therefore let the bronze coating be renewed by your supplier in time.

DUTY RATINGS

10.1 FEM 9.511 classifies the theoretical loading conditions and operating time in hours per day.

FEM 9.755 classifies the theoretical duration of service for safe operation.

APPLICATION OF FEM RULES TO PNEUMATIC HOISTS

With most mechanical equipment, the limiting factor with regard to operating time is that of HEAT GENERATION.
For example, an electric motor if not periodically allowed a 'rest period' to allow it to cool down after each period of use will cease to function due to irreversible damage arising as a consequence of the heat.

Air motors perform differently. Although heat is generated, providing that the motor is properly lubricated, no damage will ensue. The expanding air at the outlet manifold also has a cooling effect on the motor.

As a result pneumatic motors are commonly referred to as 100% duty rated or continuous rated, which means simply that they may be used continuously without a cooling down period and without damage arising as a consequence.

Incorporated into the TMH hoist are three classes of components:

1. Sacrificial components - These components are designed to incur wear to either protect other components or to function by means of friction generation. They require periodic inspection and replacement and comprise of the rotor vanes and the brake disc. Inadequate lubrication seriously reduces the life expectancy of the vanes.

2. Load chain - Whilst adequate lubrication of the load chain will reduce friction and thereby limit the wear occurring between the bearing points of adjacent links, it will not totally eliminate it. Hence it will require regular inspection and will also require replacement within the service life of the hoist.

3. Structural and mechanical components - These comprise all other parts of the hoist, including gearbox and bearings, rotor and housing, valve, hooks, pins etc. A theoretical service life for every component has been calculated (available on request). For the purposes of the summary, the SHORTEST service life of any component has been included.

10.2 TABLES OF DUTIES - TMH-37.5T & TMH-50T/4 Hoist

FEM standard	For all mentioned TMH models
FEM 9.511	1Bm (M3)
Theoretical duration of service	
FEM 9.755	
Sacrificial components	1Bm (M3)
Load chain	1Bm (M3)
Structural & mechanical components*	1Bm (M3)

*Shortest duration stated.

IMPORTANT NOTES

- A hoist is deemed to be operating when it is in motion.
- All ratings are based on a clean, dry, air supply and correct lubrication.
- Load chain must be to manufacturer's specification.
- Special chains are excluded (consult your supplier).
- Mode of use must be in accordance with manufacturer's recommendation.

EXPLOSION PROTECTION

11.1 The UK is now covered by the UK Ex scheme for the use of non-electrical in hazardous areas and is covered by the 'Product Intended for use in Potentially Explosive Atmospheres Regulation 2016' (UK SI 2016: No 1107 as amended by UK SI 2019 No 696 Schedule 25, schedule 3A, Part 6)

For Europe and many other parts of the world we also offer ATEX Non-electrical equipment certified under the ATEX 2014/34/EU Directive.

For both the UK Ex and ATEX this is split into two categories of equipment available from Red Rooster – Group – I mining (I M2 De-energised in an emergency) and group II – Zone 1 + 21 & Zones 2 + 22)

The Explosive Protection Level (EPL) has been set when the effective ignition sources are identified and when they become effective in normal operation and in the case of expected malfunctions. The normal ambient temperature range for Red Rooster air hoists is
-20°C to +60°C.

As standard all Red Rooster air hoists are certified as Group II Category 3 (Zone 2 Gas or 22 Dust)
This excludes the TMM-140 & TCR-250 ME. (standard only)

Standard hoists are suitable for use in ZONE 2 Gas areas certified as Ex Group II 3 G Ex h IIB T4 Gc
Standard hoists are suitable for use in ZONE 22 Dust areas certified as Ex Group II 3 D Ex h IIIB T135°C Dc

With extra protection can be used in ZONE 1 Gas areas certified as Ex Group II 2 G Ex h IIB T4 Gb
With extra protection can be used in ZONE 21 Dust areas certified as Ex Group II 2 D Ex h IIIB T135°C Db

Further protection allows the hoist to work in ZONE 1 Gas areas certified as Ex Group II 2 G Ex h IIC T4 Gb
Further protection allows the hoist to work in ZONE 21 Dust areas certified as Ex Group II 2 D Ex h IIIC T135°C Db
(not suitable for TCR Mini or TCS range, IIC or IIIC areas)

Red Rooster hoists will cover temperature classes T1 to T4 so can be certified to work with all Gases with the exception of Carbon Disulphide which is in temperature class T6.

The glow temperatures for dusts must be above 220°C or ignition temperatures above 202°C for use in Zones 21 and 22.

Mining – Ex Group I M2 Ex h I Mb (Mechanical equipment de-energised in an emergency)

TROLLEYS AND OVERHEAD CRANES
Red Rooster trolleys and overhead cranes use standard steel wheels for use in a Zone 2 + 22 area and normally with Bronze wheels in a Zone 1 + 21 area with a Gas group of IIB or IIC and Dust group IIIB or IIIC. The normal running speeds of our trolleys and overhead cranes are less than the 1 m/s that the standard allows. (Steel wheels can be acceptable for Zone 1 Gas Group IIB / Dust Group IIIB)

When built into an assembly such as an overhead crane the UK Ex / ATEX rating will be for the complete assembly, which may be less than some of the individual parts.

SPECIAL INSTRUCTIONS
This section of the manual refers to special instructions, exclusions or warnings about the equipment.

LUBRICATION
Lubrication oil should not have an ignition temperature below T135°C (T4) BS EN80079-36:2016.

Several gases such as hydrogen sulphide and ethylene oxide are at the very top of the IIB temperature class and are extremely flammable so you may wish to include them in the higher IIC temperature class. This is also relevant for impact sensitive dusts, around light metals, dusts with glow temperatures less than 210°C and ignition temperatures below 202°C. In an area where combustible dusts are present the surface temperature cannot exceed two thirds of the minimum ignition temperature of the dust and air mixture or the glow temperature of the dust.

Ambient temperature range for air hoists and air trolleys is -20°C≤Ta≤+60°C

Some models of Red Rooster equipment can only be certified for use in temperature class T5 or T6 when a special assessment has been completed.

Air motors, control valves and hoses are all positively pressurised so gas or dust cannot penetrate internal parts when operating or when under pressure.

Red Rooster hoists and trolleys are constructed to avoid the build-up of dust deposits. But where dust does build up, provision shall be made for removal of the dust and keeping the hoist, trolley and pipework clean.

External influences such as heat from direct sunlight or exhausts can affect the hoist so the ambient temperature should be checked. Other influences such as cold, wind, water, compressor air temperature, contact with chemicals and mechanical hazards can all have an affect on the hoist operation.

EXPLOSION PROTECTION

11.1 EARTHING

The hoist or hoist and trolley should normally earth through the top hook or the running wheels of the trolley into the supporting steel structure. If this does not happen then the hoist can earth through the load chain of the hoist, when grounded. If the chain is rusty it can affect the earthing of the hoist. During inspection the chain may need cleaning, oiling or replaced to allow adequate earth leakage. If the earth leakage is less than that recommended a separate earth strap should be fitted. Neither the running surface of beams nor the wheels should be painted. During lifts the load may be required to be earthed if there is any doubt as to the earth leakage from the hoist.

IMPACT HAZARDS

The materials chosen and their coverings should help to prevent an ignition hazard so that a corroded section of steel does not impact against a light metal or high grade steel. The selected materials and the design should exclude as far as possible mechanical sparks due to impact, sliding or friction. Where external housings are made of aluminium then the possibility of impact should not be possible.

PLASTIC SURFACES

Where plastic has been used for the pendant, control boxes or on the hoist these surfaces must only be cleaned with a damp cloth (water), which reduces electrostatic charging due to friction from wiping with a cloth.

COMPRESSED AIR HOSES

All air hoses used in a Zone 1 + 21 & 2 + 22 areas should be ‘Anti-Static’ with a sufficiently low surface resistance to prevent an electrostatic ignition hazard. The Hose should always have a higher Safe Working Pressure that the hoist and above that of the air supply from the compressor.

Air supply hoses need to be certified with a current report on the condition of the hose and checked before fitting to the hoist. The burst of a hose or connection failure can create a dust cloud and also create a static charge.

Hose safety whip cables should be used to prevent hoses flying if a connection fails to limit the dust cloud and the flying hose.
*Red Rooster hoists should only be operated with compressed air.

MINING APPLICATIONS

In general most standard Red Rooster hoists can be used for underground mining operations along with the surface buildings and services. The equipment is certified for Group I M2 use, so must be switched off / isolated in the event of an emergency. The equipment has to be robust, non-sparking, taking into account the conditions and the handling underground and be built to survive along with explosive protection from Methane gas / dust - Firedamp. The maximum surface temperature of 150°C for coal dust atmospheres will not be reached where a coal dust layer can be formed or 450°C where coal dust will not form a layer.

For mining hoists the lubrication oil shall be replaced with non-flammable substances or substances not capable of forming explosive atmospheres (BS EN 1127-2:2014). Hoist lubrication is controlled by the drip setting on the lubricator and set as per the manual.

⚠ DANGER

- During use the operator must avoid loads or the bottom hook impacting with surrounding steel equipment and structural steel which may result in sparking or frictional sparks caused by dragging loads past fixed structures.
- Any impacts involving light metal or cast iron should be avoided and these materials either protected or removed from the area.
- Damaged or badly corroded coatings or chain should be replaced or repaired to keep up the UK Ex / ATEX rating of the equipment. For assistance contact RRL.
- Earthing of hoists is not usually required as the hook connection to structure allows the hoist to connect to earth.
- The running surfaces of beams and cranes should not be painted to allow wheels to earth to the structure.
- Stainless steel ‘C’ track systems should be applied with an earth wire to connect onto the structure.
- Plastic junction boxes should only be cleaned with water and a clean cloth to reduce any electrostatic charge coming from the rubbing of the plastic surface.
- Dust should not be allowed to accumulate on the hoist, trolley, crane or junction boxes.
- Only use a damp cloth for wiping plastic surfaces.

TMH-37.5T
AIR HOIST

RED ROOSTER
LIFTING

RAISING EXPECTATIONS

The TMH-37.5T is a 37.5 tonne chain hoist from Red Rooster Lifting. This is part of our hook suspension air hoist range for lifting equipment applications in industry.

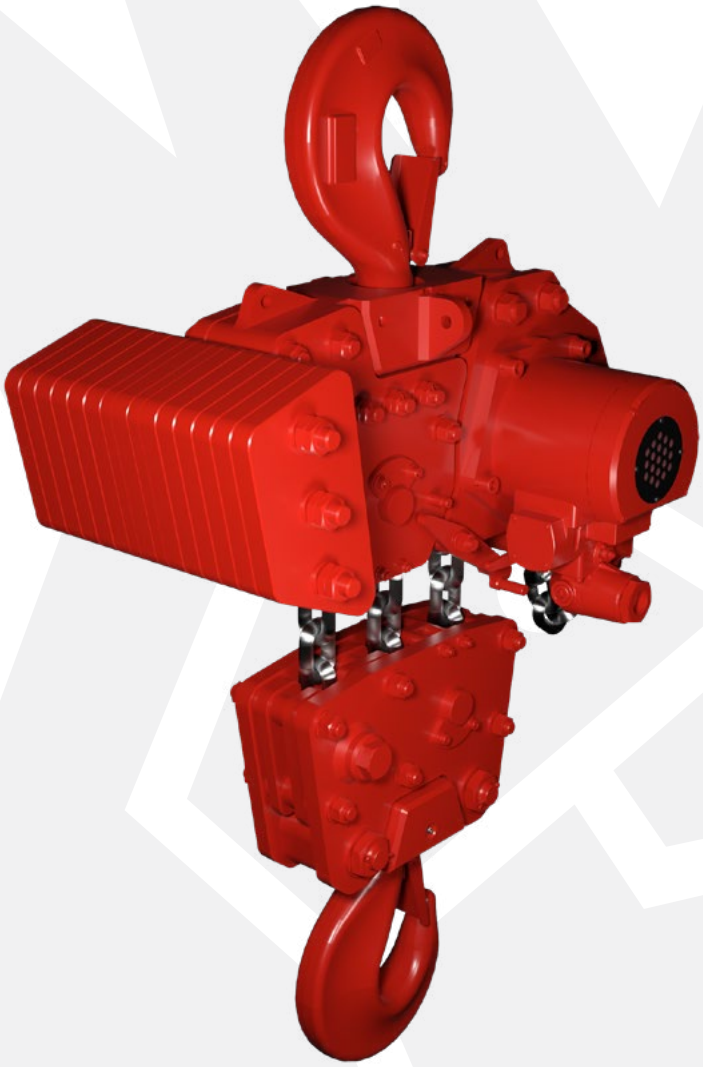

The new **Red Rooster Lifting** TMH series air hoists have the highest lifting speed with the lowest headroom on the hoist market. The TMH hoists are designed to operate at full lifting capacity with an air pressure from 4 – 6.3 bar. For full speed operation the hoist air pressure should be 6.3 bar.

STANDARD FEATURES

- Toku rotary vane motor
- Robust 3 step planetary gearbox
- Failsafe automatic internal disc brake
- Mechanical upper & lower switches
- Cast steel housing
- Internal silencing down to 82 dB(A)
- Alloy safety swivel hooks with safety catch
- Load chain 23.5 x 66mm of European manufacture to EN818-7
- Automatic load limiter

AVAILABLE OPTIONS

- Marine specification
- Special paint systems
- Corrosion protection
- UK Ex scheme or ATEX zone 1 specification
- Chain collectors (galvanised or stainless steel)
- Air Service units
- Radio control

UK EX SCHEME ZONE 2
ATEX ZONE 2
AS STANDARD

T: +44 (0) 1651 872101
sales@redroosterlifting.com

REDROOSTERLIFTING.COM

Red Rooster Lifting Limited Nauta House, The Meadows, Oldmeldrum, Inverurie, Aberdeenshire, UK, AB51 0EZ

TMH-37.5T
AIR HOIST

RED ROOSTER
LIFTING

RAISING EXPECTATIONS

DIMENSIONS

All measurements are in mm
Information subject to change without notice

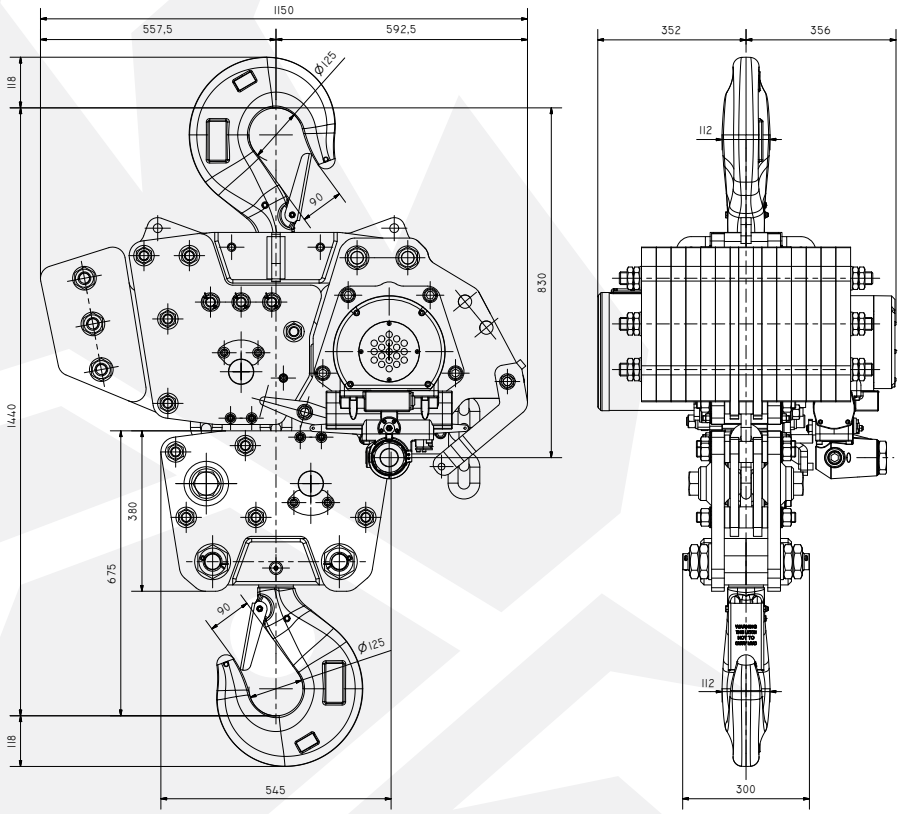

HOIST MODEL	TMH-37.5T
WLL	37500 kg
CHAIN FALLS	3
LIFTING SPEED WITH LOAD	0.9 m/min
LIFTING SPEED WITHOUT LOAD	1.8 m/min
LOWERING SPEED WITH LOAD	2.0 m/min
AIR CONSUMPTION LIFTING	108 l/sec
AIR CONSUMPTION LOWERING	180 l/sec
WORKING PRESSURE	4 - 6 Bar
AIR CONNECTION	1 1/2" BSP
MINIMUM HOSE DIA.	1 1/2"
AIR SERVICE	1 1/2" FLR
WEIGHT 3M HOL	1300 kg
ADDITIONAL METRE HOL	36.6 kg

T: +44 (0) 1651 872101
sales@redroosterlifting.com

REDROOSTERLIFTING.COM

Red Rooster Lifting Limited Nauta House, The Meadows, Oldmeldrum, Inverurie, Aberdeenshire, UK, AB51 0EZ

DRAWINGS AND PARTS LISTS

REVISION HISTORY		
REV.	DATE	APPROVED
0		

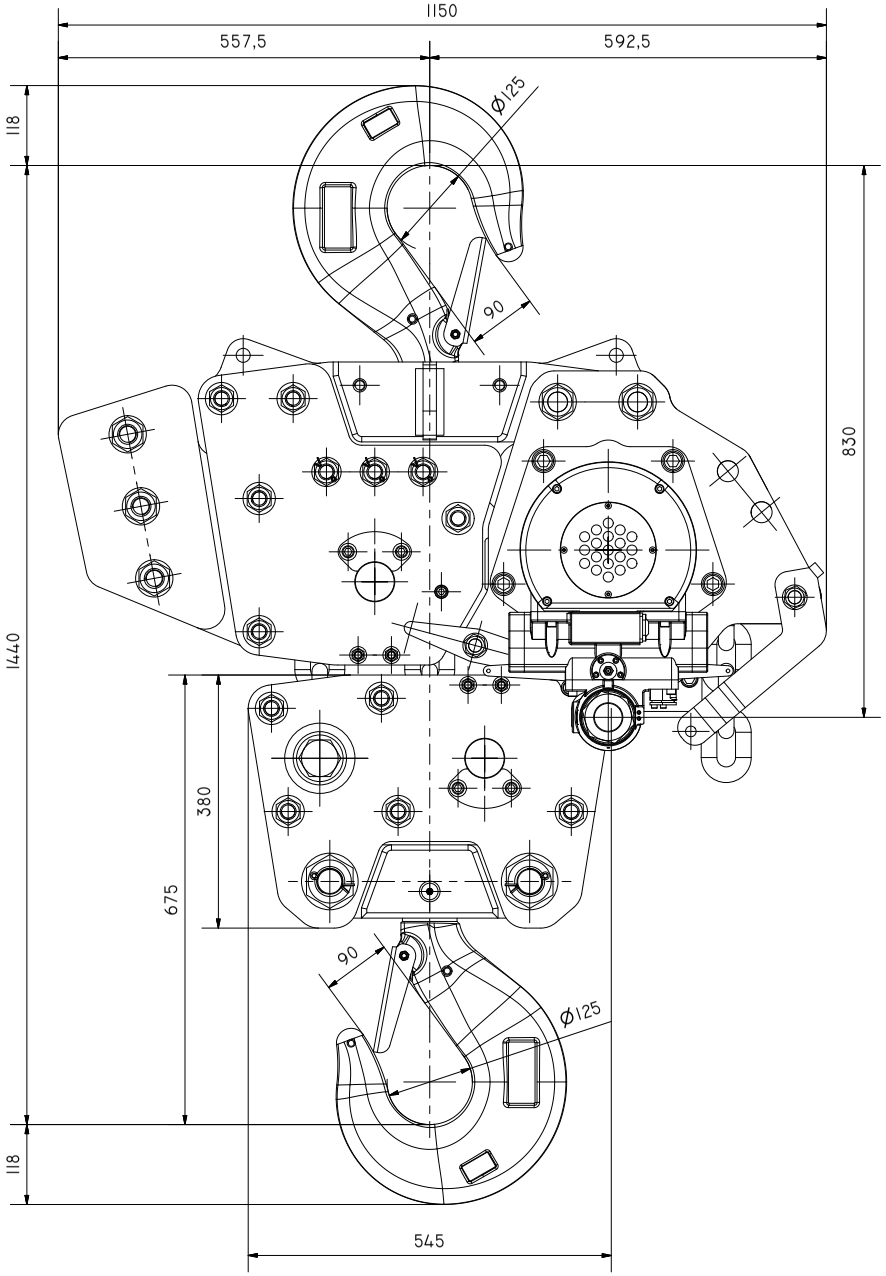

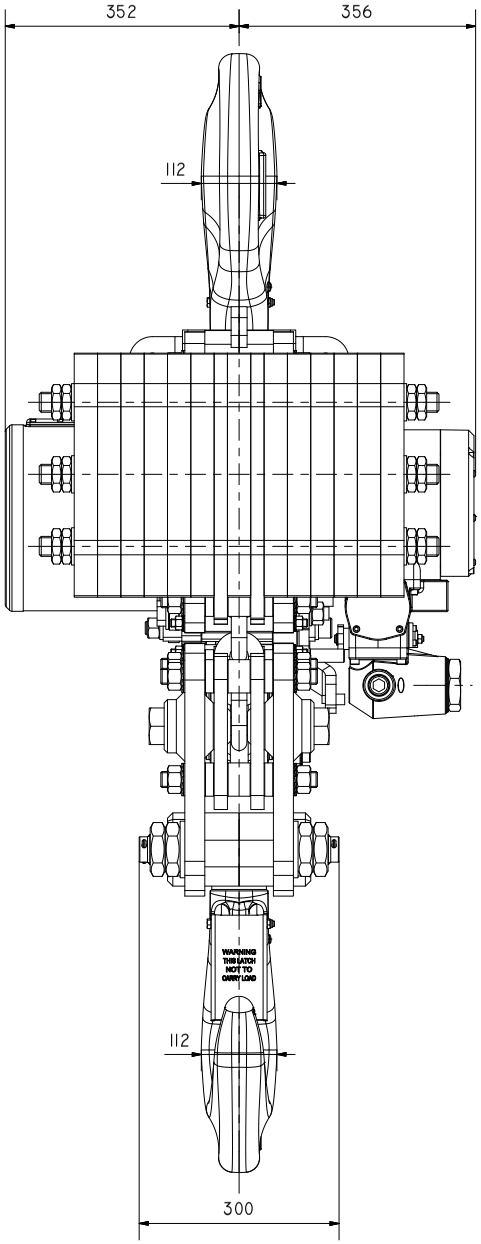

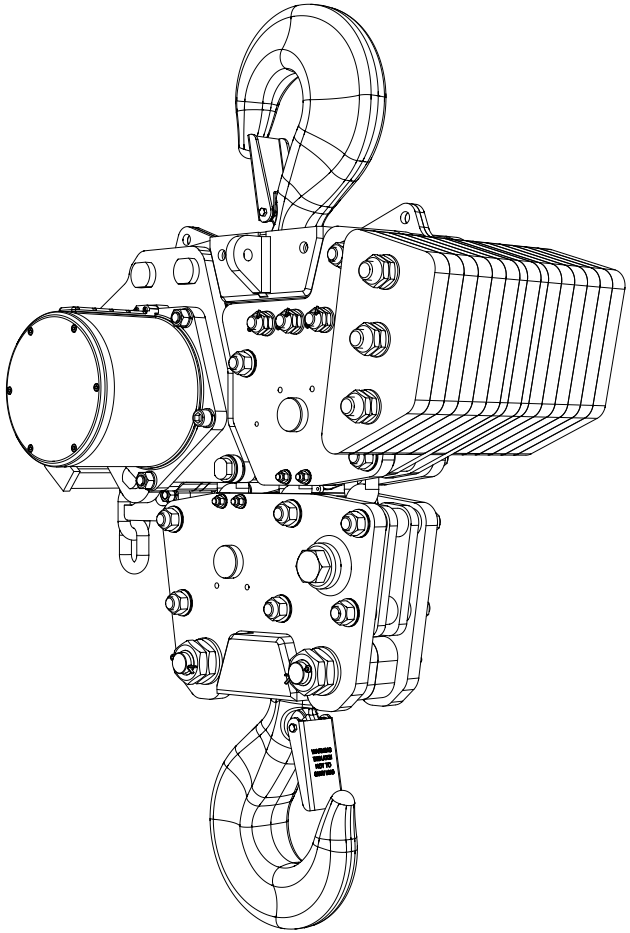

SCALE NOT TO SCALE	MATERIAL			TITLE OF PART: GENERAL ASSEMBLY	PART NUMBER: DRG 1578-00 1/1
	SURNAME	DATE	SIGNATURE		
DESIGNED BY	T. MIKOLAJEWSKI	04/05/2018		RED ROOSTER LIFTING	DATE: 04/05/2018
DRAWN BY	T. MIKOLAJEWSKI	04/05/2018			REVISION: 0 / WEIGHT: 1200KG
CHECKED BY					REPLACES DRAWING: -
APPROVED BY	B. AITKEN				PROFILE NUMBER: -
SHEET SIZE A3				TITLE OF PROJECT: TMH 37,5/3	

RED ROOSTER LIFTING
NAUTA HOUSE, THE MEADOWS
OLDMELDRUM, ABERDEENSHIRE, AB51 0EZ
TEL: +44(0)1651 872100
MAIN FAX: +44(0)1651 872099
WWW.REDROOSTERLIFTING.COM

UNLESS OTHERWISE SPECIFIED
ALL DIMENSIONS ARE IN MILIMETERS
TOLERANCES
LINEAR
UP TO 5 ±0,05
OVER 5 UP TO 30 ±0,1
OVER 30 UP TO 120 ±0,2
OVER 120 UP TO 500 ±0,25
OVER 500 UP TO 1000 ±0,5
OVER 1000 ±1
ANGULAR ±0,5°
SURFACE ROUGHNESS N10
IF IN DOUBT ASK

REVISION HISTORY		
REV.	DATE	APPROVED
0		

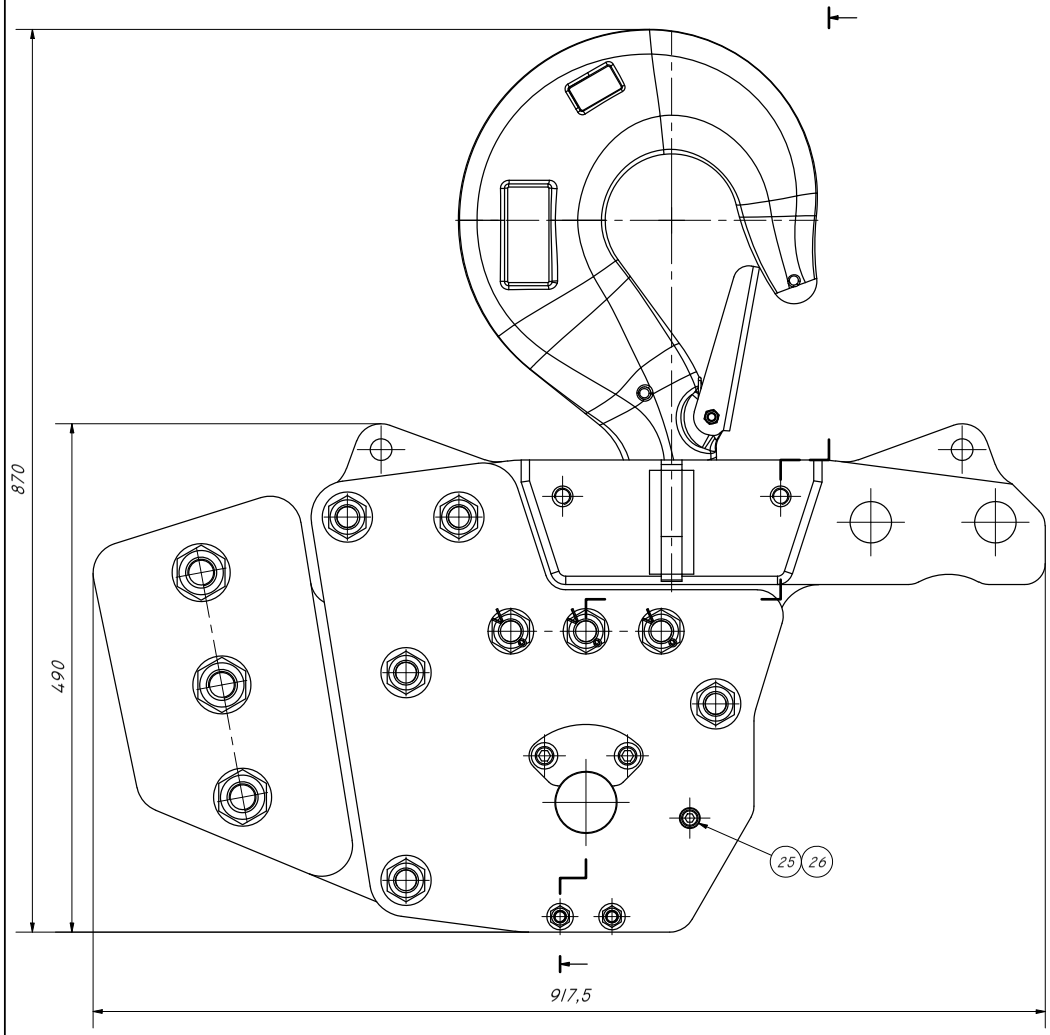

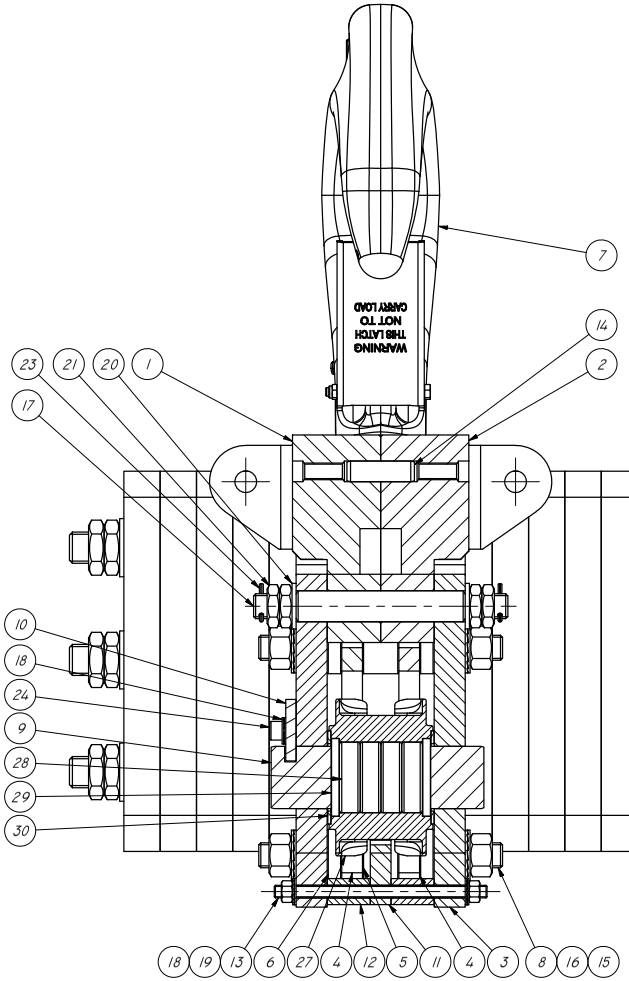

NOTE:- No. OF COUNTERWEIGHT PLATES IS DEPENDANT ON H.O.L.

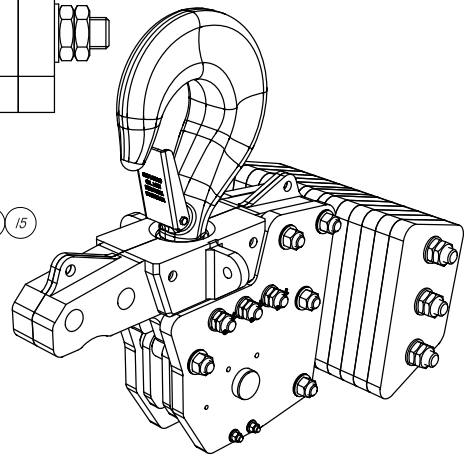

PARTS LIST				
ITEM	QTY	PART NUMBER	DESCRIPTION	REV.
1	1	DRG 1578-03	Top Hook Holder - Left	0
2	1	DRG 1578-04	Top Hook Holder - Right	0
3	2	DRG 1578-08	Top Side Plate	0
4	2	DRG 1578-10	Top Chain Guide	0
5	3	DRG 1578-24	Chain Guide - Spacer	0
6	6	DRG 1578-25	Chain Guide - Spacer	0
7	1	DRG 1578-23	Hook	0
8	5	DRG 1578-26	Tie Rod	0
9	1	DRG 1578-27	Wheel Shaft	0
10	1	DRG 1578-28	Thrust Plate	0
11	1	DRG 1578-29	Chain Separator	0
12	4	DRG 1578-30	Chain Guide - Spacer	0
13	2	DRG 1578-31	Tie Rod	0
14	2	ISO 2338 - 20 h8 x 65	Parallel Pin	
15	10	NL24SP	M24 NordLock Washer Large Diameter Glued Pair	0
16	10	ISO 4032 - M24	Hex Nut	
17	3	DRG 1578-33	Hanger Pin	0
18	6	NL12SP	M12 NordLock Washer Large Diameter Glued Pair	0

PARTS LIST				
ITEM	QTY	PART NUMBER	DESCRIPTION	REV.
19	4	ISO 4032 - M12	Hex Nut	
20	6	DIN 125 - A 25	Washer	
21	12	ISO 4035 - M24	Hex Nut	
23	6	ISO 1234 - 4 x 32	Split Pin	
24	2	ISO 4762 - M12 x 40	Hexagon Socket Head Cap Screw	
25	1	DRG 1578-34	Limit Lever - Stop End	0
26	1	ISO 4762 - M10 x 60	Hexagon Socket Head Cap Screw	
27	1	TMH 25 PW-02	Pocket Wheel	0
28	4	ISO 3245 - 51 D - 60 x 68 x 20	Needle roller bearings, drawn cup without inner rings	
29	2	DIN 3760 - AS - 60 x 75 x 8 - NBR	Shaft Seal Ring	
30	2	TMH 25 SR-01		0
31	13	DRG 1578-35	Counterweight Plate	0
34	6	DIN 125 - A 31	Washer	
35	12	ISO 4035 - M30	Hex Nut	
36	3	DRG 1578-36	Tie Rod	0

SCALE 1:5	MATERIAL		TITLE OF PART: Top Block
	SURNAME	DATE	SIGNATURE
DESIGNED BY	T. Mikolajewski	03/05/2018	
DRAWN BY	E. Crichton	15/05/2018	
CHECKED BY			
APPROVED BY	B. Aitken		
SHEET SIZE A3			TITLE OF PROJECT: 37,5TE / 3F Air Hoist

RED ROOSTER LIFTING
NAUTA HOUSE, THE MEADOWS
OLDMELDRUM, ABERDEENSHIRE, AB51 0EZ
TEL: +44(0)1651 872101
MAIN FAX: +44(0)1651 872098
WWW.REDROOSTERLIFTING.COM

DATE	15/05/2018
REVISION	0
WEIGHT	N/A
REPLACES DRAWING	
PROFILE NUMBER	

PART NUMBER: DRG 1578-01 1/1

UNLESS OTHERWISE SPECIFIED
ALL DIMENSIONS ARE IN MILIMETERS
TOLERANCES
LINEAR
UP TO 5 ± 0,05
OVER 5 UP TO 30 ± 0,1
OVER 30 UP TO 120 ± 0,2
OVER 120 UP TO 500± 0,25
OVER 500 UP TO 1000 ± 0,5
OVER 1000 ± 1
ANGULAR ± 0,5°
SURFACE ROUGHNESS Nig

IF IN DOUBT ASK

REVISION HISTORY		
REV.	DATE	APPROVED
0		

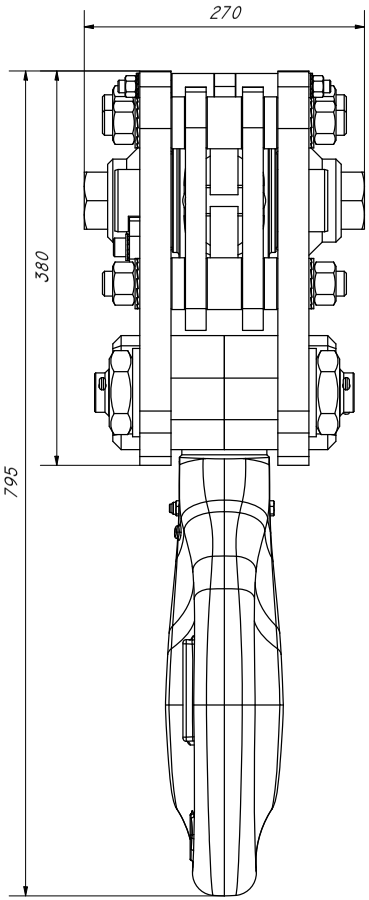

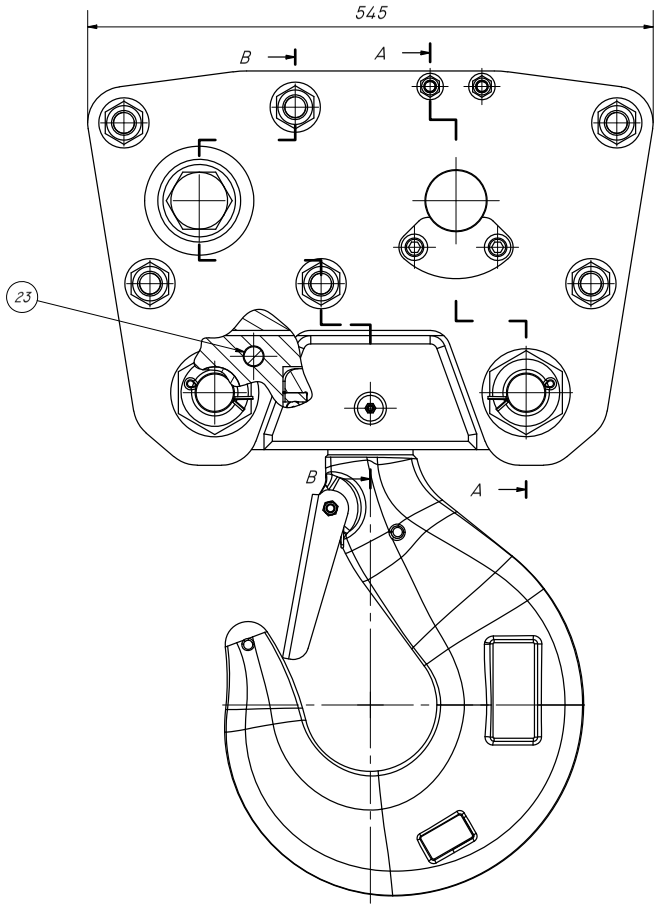

A-A (1 : 5)

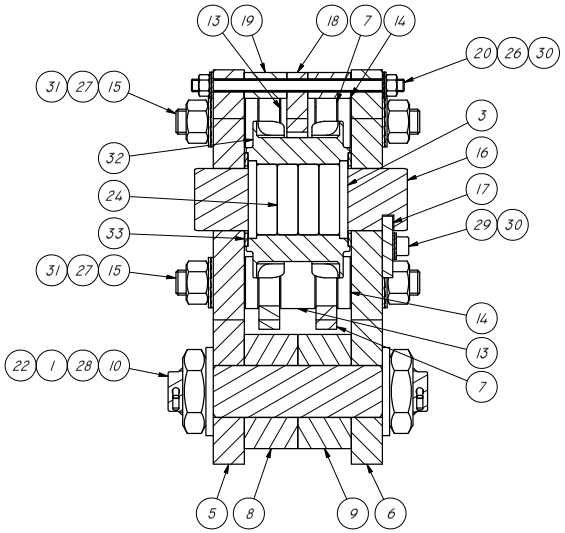

B-B (1 : 5)

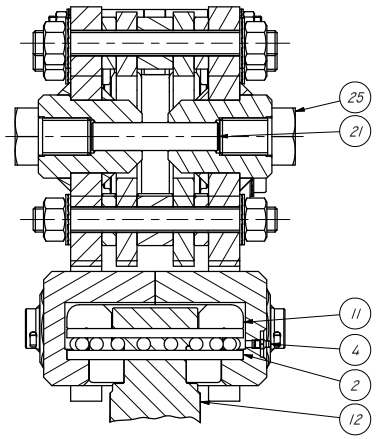

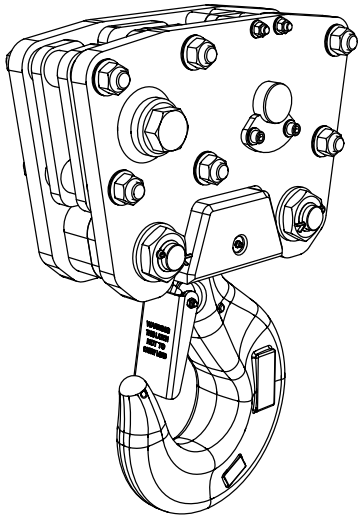

PARTS LIST

ITEM	QTY	PART NUMBER	DESCRIPTION	REV.
1	4	DIN 125 - A 46	Washer	
2	1	DIN 711 - 511 26 - 130 x 170 x 30	Thrust Ball Bearing	
3	2	DIN 3760 - AS - 60 x 75 x 8 - NBR	Shaft Seal Ring	
4	1	DIN 71412 - AM8 coned short	Lubricating Nipple, coned Type A	
5	1	DRG 1578-05	Bottom Side Plate - Right	0
6	1	DRG 1578-06	Bottom Side Plate - Left	0
7	2	DRG 1578-11	Bottom Chain Guide	0
8	1	DRG 1578-14	Bottom Hook Holder I	0
9	1	DRG 1578-15	Bottom Hook Holder II	0
10	2	DRG 1578-21	Load Bar	0
11	2	DRG 1578-22	Thrust Ring	0
12	1	DRG 1578-23	Hook	0
13	6	DRG 1578-24	Chain Guide - Spacer	0
14	12	DRG 1578-25	Chain Guide - Spacer	0
15	6	DRG 1578-26	Tie Rod	0
16	1	DRG 1578-27	Wheel Shaft	0
17	1	DRG 1578-28	Thrust Plate	0
18	1	DRG 1578-29	Chain Separator	0
19	4	DRG 1578-30	Chain Guide - Spacer	0
20	2	DRG 1578-31	Tie Rod	0
21	1	DRG 1578-32	Chain Anchor Bolt	0
22	4	ISO 1234 - 6.3 x 50	Split Pin	
23	2	ISO 2338 - 20 h8 x 45	Parallel Pin	
24	4	ISO 3245 - 51 D - 60 x 68 x 20	Needle roller bearings, drawn cup without inner rings	
25	2	ISO 4018 - M36 x 50	Hex-Head Bolt	
26	4	ISO 4032 - M12	Hex Nut	
27	12	ISO 4032 - M24	Hex Nut	
28	4	ISO 4035 - M45	Hex Nut	
29	2	ISO 4762 - M12 x 40	Hexagon Socket Head Cap Screw	
30	6	NL12SP	M12 NordLock Washer Large Diameter Glued Pair	0
31	12	NL24SP	M24 NordLock Washer Large Diameter Glued Pair	0
32	1	TMH 25 PW-02	Pocket Wheel	0
33	2	TMH 25 SR-01		0

Scale 1:5	Material			Title of Part: Bottom Block
	Surname	Date	Signature	
Designed By	T. Mikolajewski	03/05/2018		RED ROOSTER LIFTING
Drawn By	E. Crichton	16/05/2018		
Checked By				
Approved By	B. Aitken			
Sheet Size A3				Title of Project: 37,5TE / 3F Air Hoist

NAUTA HOUSE, THE MEADOWS
OLDMELDRUM, ABERDEENSHIRE, AB51 0EZ
TEL: +44(0)1651 872101
MAIN FAX: +44(0)1651 872098
WWW.REDROOSTERLIFTING.COM

Date: 16/05/2018
Revision: 0
Weight: N/A
Replaces Drawing
Profile Number

Part Number: DRG 1578-02
1 / 1

UNLESS OTHERWISE SPECIFIED
ALL DIMENSIONS ARE IN MILIMETERS
Tolerances
Linear
up to 5 ± 0,05
over 5 up to 30 ± 0,1
over 30 up to 120 ± 0,2
over 120 up to 500± 0,25
over 500 up to 1000 ± 0,5
over 1000 ± 1
Angular ± 0,5°
Surface Roughness N10

If In Doubt Ask

REVISION HISTORY		
REV.	DATE	APPROVED
0		

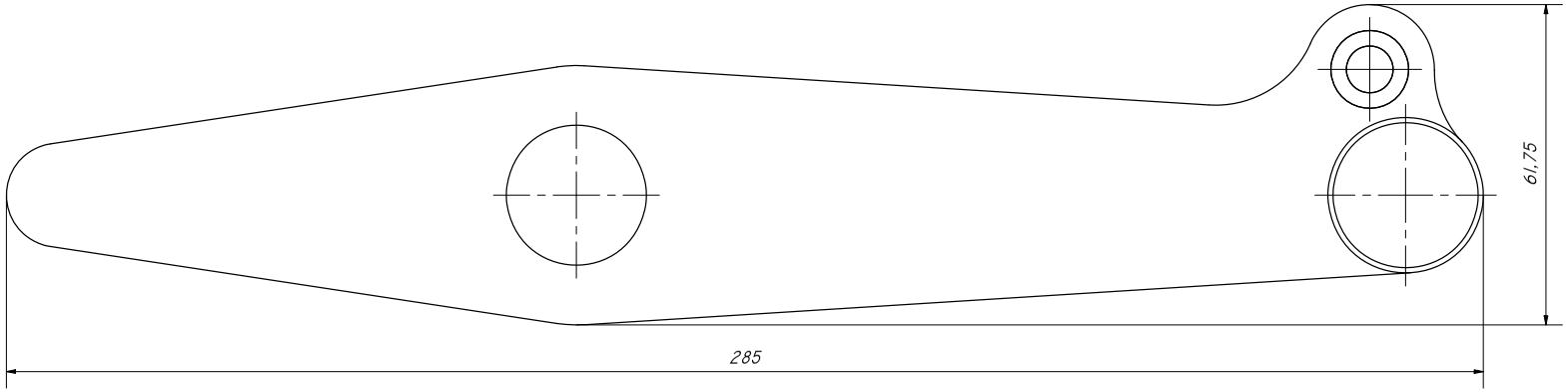

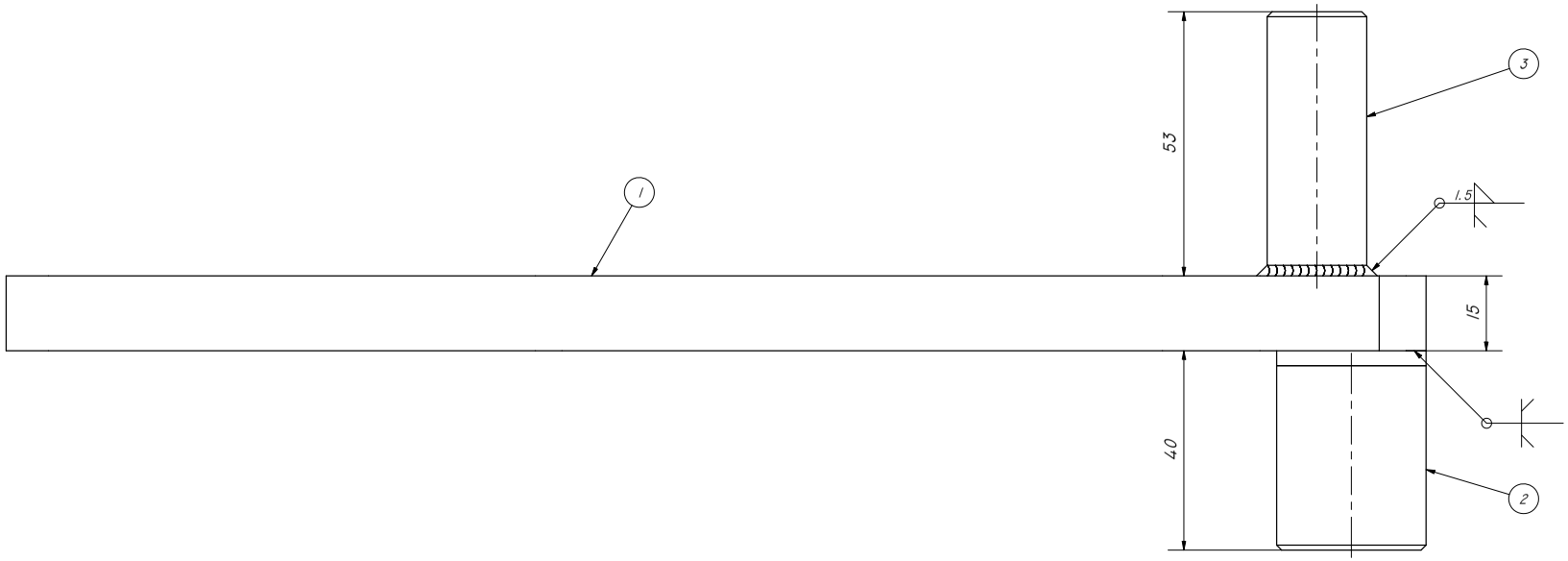

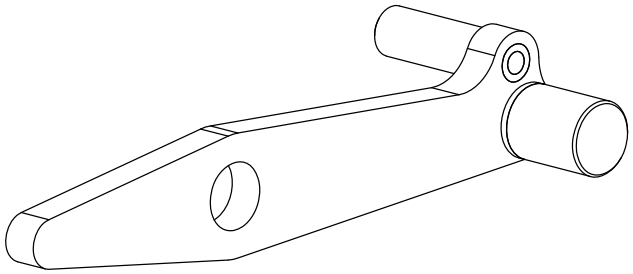

PARTS LIST				
ITEM	QTY	PART NUMBER	DESCRIPTION	REV.
1	1	DRG 1578-16	LIMIT LEVER - ARM	0
2	1	DRG 1578-19	LIMIT LEVER - PUSHER	0
3	1	DRG 1578-20	LIMIT LEVER - PUSHER	0

SCALE 1:1	MATERIAL S355		
	SURNAME	DATE	SIGNATURE
DESIGNED BY	T. MIKOLAJEWSKI	03/05/2018	
DRAWN BY	E. CRICHTON	16/05/2018	
CHECKED BY			
APPROVED BY	B. AITKEN		
SHEET SIZE A3			

TITLE OF PART: LIMIT LEVER

RED ROOSTER LIFTING
NAUTA HOUSE, THE MEADOWS
OLDMELDRUM, ABERDEENSHIRE, AB51 0EZ
TEL +44(0)1651 872101
MAIN FAX: +44(0)1651 872098
WWW.REDROOSTERLIFTING.COM

DATE	16/05/2018
REVISION	0
WEIGHT	1.6 KG
REPLACES DRAWING	
PROFILE NUMBER	

TITLE OF PROJECT: 37,5TE / 3F AIR HOIST

PART NUMBER: DRG 1578-07
1 / 1

UNLESS OTHERWISE SPECIFIED
ALL DIMENSIONS ARE IN MILIMETERS
TOLERANCES
LINEAR
UP TO 5 ± 0,05
OVER 5 UP TO 30 ± 0,1
OVER 30 UP TO 120 ± 0,2
OVER 120 UP TO 500 ± 0,3
OVER 500 UP TO 1000 ± 0,5
OVER 1000 ± 1
ANGULAR ± 0,5°
SURFACE ROUGHNESS N6
IF IN DOUBT ASK

RED ROOSTER LIFTING

Hoist Body - TMH-37.5T

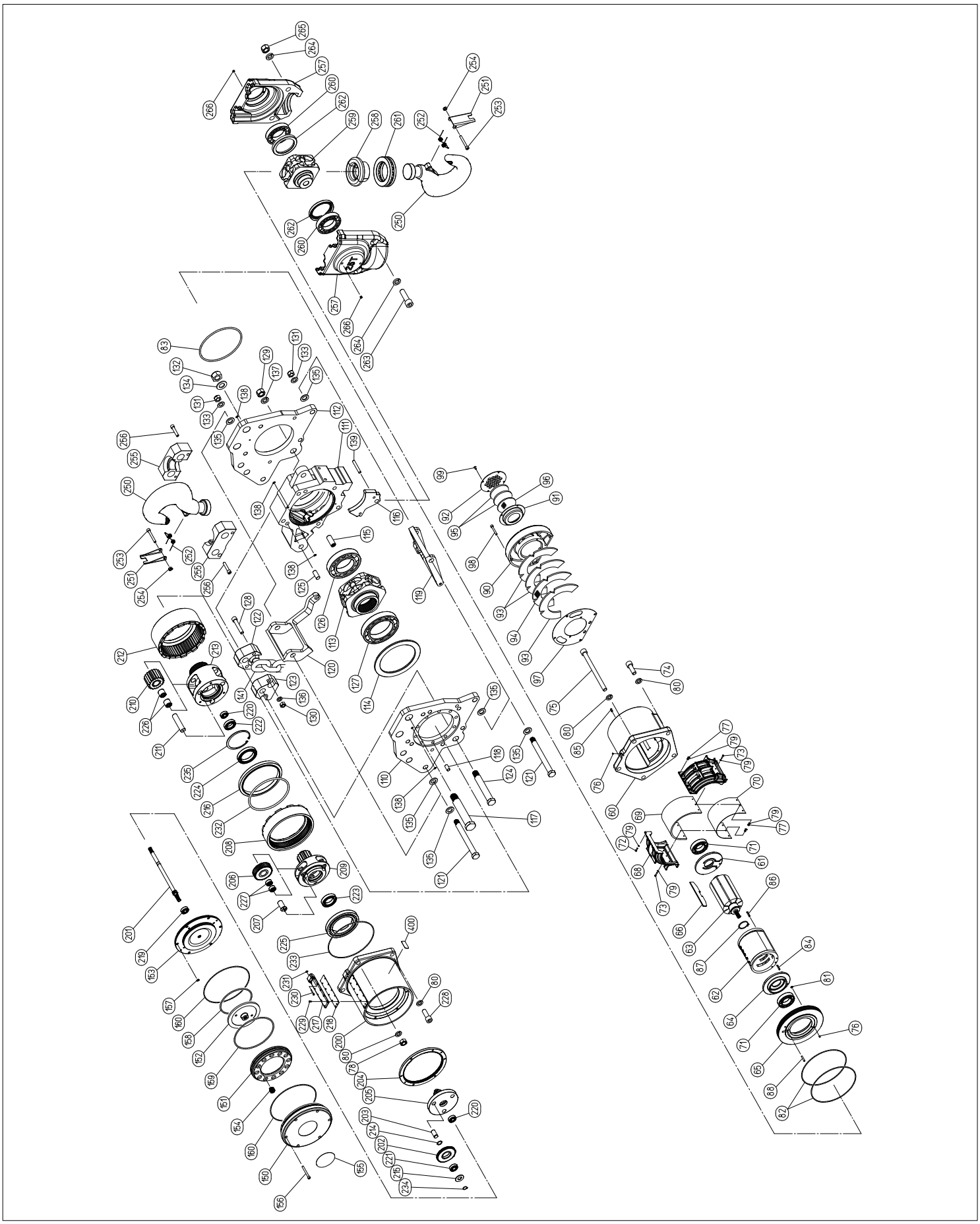

▪ Red Rooster Lifting Limited ▪ Nauta House, The Meadows, Oldmeldrum, Aberdeenshire, AB51 0EZ ▪ Tel: +44 (0) 1651 872101 ▪

RED ROOSTER LIFTING

Hoist Body - TMH-37.5T

Fig. No.	Part Number	Part Name	Parts Per Hoist
060	425814790	MOTOR CASE	1
061	425814180	REAR PLATE	1
062	425814160	CYLINDER	1
063	425814150	ROTOR	1
064	425814170	FRONT PLATE	1
065	425814M40	FRONT COVER	1
066	137102034	VANE	8
068	425814M50	EXHAUST HOLDER	2
069	137402061	SILENCER M(F)	1
070	137402062	SILENCER M(ST)	1
071	130107011	BEARING 6210	2
072	131704016	HEX.SOCKET HEAD CAP SCREW M4X16	2
073	131704020	HEX.SOCKET HEAD CAP SCREW M4X20	6
074	131720055	HEX.SOCKET HEAD CAP SCREW M20X55	2
075	131716261	HEX.SOCKET HEAD CAP SCREW M20X260	3
076	132105005	HEX.SOCKET SET SCREW M5X5	2
077	134501004	U NUT M4	8
078	134501020	U-NUT M20	3
079	131307004	WASHER M4	16
080	131301020	SPRING WASHER M20	10
081	131101005	O-RING P-7	1
082	131117273	O-RING AS568-273	2
083	131117447	O-RING AS568-447	1
084	130605030	SPRING PIN 5X30	1
085	130606015	SPRING PIN 6X15	2
086	130606030	SPRING PIN 6X30	1
087	130302050	RETAINING RING S-50	1
088	130406079	PARALLEL PIN A6X35 H7	1
090	425814M60	MOTOR COVER	1
091	425814M70	EXHAUST COVER S	1
092	425814A90	EXHAUST PLATE	1
093	137402063	SILENCER LS	3
094	137402064	SILENCER LF	1
095	137402065	SILENCER SS	2
096	137402066	SILENCER SF	1
097	136102175	EXHAUST GASKET	1
098	131708055	HEX.SOCKET HEAD CAP SCREW M8X55	4
099	131906012	HEX.SOCKET BUTTON SCREW M6X12	4
110	425814M80	MIDDLE PLATE G	1
111	425814350	CHAIN GUIDE	1
112	425814M90	MIDDLE PLATE M	1
113	425814A50	LOAD SHEAVE	1
114	425814N90	CHAIN GUIDE COVER	1
115	425806200	COUPLING	1
116	425814360	CHAIN SEPARATOR	1
117	425814220	HANGER PIN	2
118	425814660	KNOCK PIN (16)	10
119	425814N10	LIMIT LEVER U	1

Fig. No.	Part Number	Part Name	Parts Per Hoist
120	425814N20	LIMIT LEVER D	1
121	425814N30	SET PIN	2
122	425814N40	CHAIN SET PLATE L	1
123	425814N50	CHAIN SET PLATE R	1
124	425814K60	CHAIN SET PIN	1
125	426305L61	KNOCK PIN	4
126	130126220	BEARING 6220DDU	1
127	130126026	BEARING 6026DDU	1
128	131716090	HEX.SOCKET HEAD CAP SCREW M16X90	2
129	134401024	HEX.NUT M24	1
130	134501016	U-NUT M16	2
131	134501020	U-NUT M20	2
132	134501030	U NUT M30	2
133	131307020	WASHER M20	2
134	131307030	WASHER M30	2
135	131306024	WASHER M24	6
136	131301016	SPRING WASHER M16	2
137	131301024	SPRING WASHER M24	1
138	131103006	O-RING S-8	4
139	130406080	PARALLEL PIN A12X80 H7	2
141		CHAIN 23.5X66	HOL
150	425814410	BRAKE COVER	1
151	425814400	BRAKE PISTON	1
152	425814430	BRAKE DISC	1
153	425814900	BRAKE PLATE	1
154	130802229	SPRING 20.5X21.9X2.9	12
155		NAME PLATE	1
156	131708080	HEX.SOCKET HEAD CAP SCREW M8X80	6
157	131101007	O-RING P-9	6
158	131117364	O-RING AS568-364	1
159	131117371	O-RING AS568-371	1
160	131117274	O-RING AS568-274	2
200	425814310	GEAR CASE	1
201	425814A62	FIRST PINION	1
202	425814A70	FIRST STAR GEAR	3
203	425814A80	FIRST PIN	3
204	425814E10	FIRST RING GEAR	1
205	425814E22	SECOND PINION	1
206	425814E31	SECOND STAR GEAR	3
207	425814E41	SECOND PIN	3
208	425814E51	SECOND RING GEAR	1
209	425814K22	THIRD PINION	1
210	425814K30	THIRD STAR GEAR	3
211	425814K40	THIRD PIN	3
212	425814K50	THIRD RING GEAR	1
213	425814240	CAGE	1
214	425814N70	FIRST SPACER	3
215	425814N80	FIRST THRUST COLLAR	3
216	425814230	SPACER	1

▪ Red Rooster Lifting Limited ▪ Nauta House, The Meadows, Oldmeldrum, Aberdeenshire, AB51 0EZ ▪ Tel: +44 (0) 1651 872101 ▪

RED ROOSTER LIFTING

Hoist Body - TMH-37.5T

Fig. No.	Part Number	Part Name	Parts Per Hoist
217	425814P10	AIR CONNECTOR	1
218	136102176	GASKET C	1
219	130109004	BEARING 6203ZZ	1
220	130107004	BEARING 6203	2
221	130104005	BEARING 6004	3
222	130104008	BEARING 6007	1
223	130104011	BEARING 6010	1
224	130113015	BEARING 6915	1
225	130116024	BEARING 16024	1
226	130132530	NEEDLE BEARING TA2530	6
227	130132515	NEEDLE BEARING TA2515	6
228	131720055	HEX.SOCKET HEAD CAP SCREW M20X55	2
229	131704008	HEX.SOCKET HEAD CAP SCREW M4X8	10
230	131704030	HEX.SOCKET HEAD CAP SCREW M4X30	2
231	131103006	O-RING S-8	1
232	131101215	O-RING P-215	1
233	131117274	O-RING AS568-274	1
234	130302020	RETAINING RING S-20	3
235	130301125	RETAINING RING H-125	1
250	425814E60	HOOK	2
251	425814P20	HOOK SAFETY CLAW	2
252	130802233	HOOK SPRING	2
253	131710080	HEX.SOCKET HEAD CAP SCREW M10X80	2
254	134501010	U NUT M10	2
255	425814570	HOOK END PIECE (SET)	1
256	131712060	HEX.SOCKET HEAD CAP SCREW M12X60	2
257	425814800	UNDER HOOK HOLDER	2
258	425814710	THRUST RING (SET)	1
259	425814F70	FREE CHAIN WHEEL	1
260	130125215	BEARING NJ215ET	2
261	130121220	THRUST BEARING 51220	1
262	131203105	OIL SEAL SB-10513514	2
263	131724080	HEX.SOCKET HEAD CAP SCREW M24X80	2
264	131310024	SPRING WASHER M24	4
265	134401024	HEX.NUT M24	2
266	134902003	HEX.PLUG PT1/8	4
400		BRANDED NAME PLATE	1

▪ Red Rooster Lifting Limited ▪ Nauta House, The Meadows, Oldmeldrum, Aberdeenshire, AB51 0EZ ▪ Tel: +44 (0) 1651 872101 ▪

RED ROOSTER LIFTING

Built-In Mains Emergency Stop Valve Pendant Body -TMH-37.5T

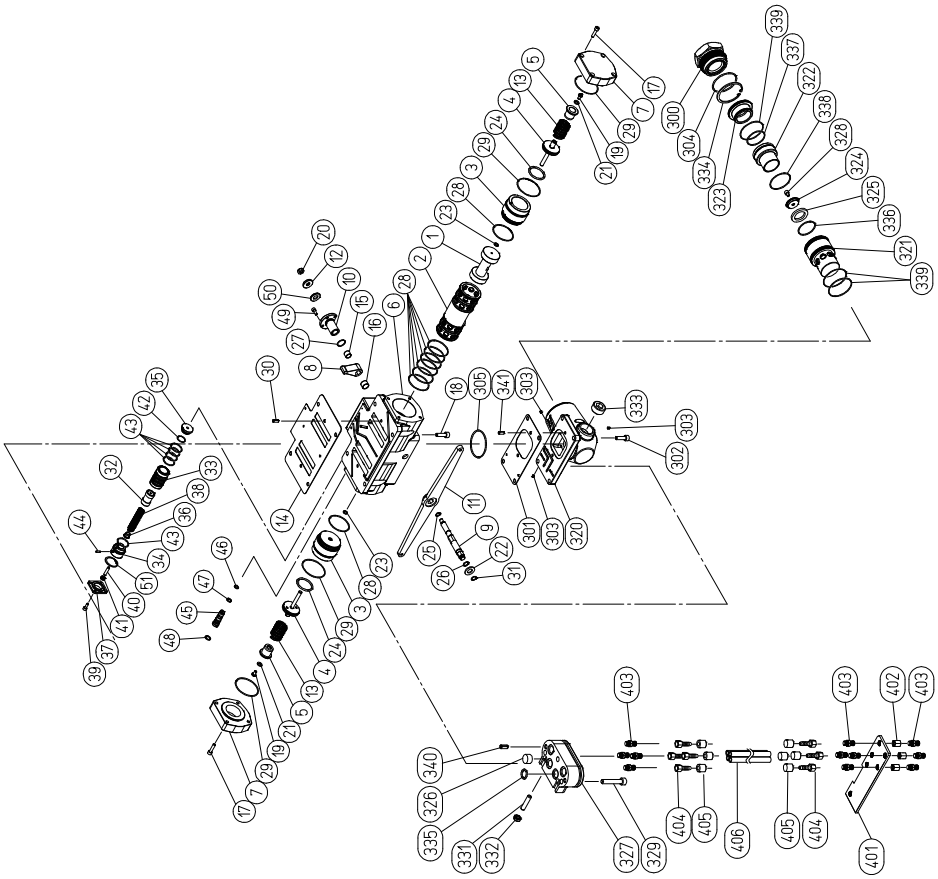

▪ Red Rooster Lifting Limited ▪ Nauta House, The Meadows, Oldmeldrum, Aberdeenshire, AB51 0EZ ▪ Tel: +44 (0) 1651 872101 ▪

RED ROOSTER LIFTING

Built-In Mains Emergency Stop Valve Pendant Body -TMH-37.5T

Fig. No.	Part Number	Part Name	Parts Per Hoist
001	425814010	MAIN SPOOL	1
002	425814C30	MAIN BUSH	1
003	425814C20	SPOOL CYLINDER	2
004	425814C60	SPOOL PISTON	2
005	425814C70	SPRING SHEET	2
006	425814060	VALVE BODY	1
007	425814080	SIDE COVER	2
008	425814140	LIMIT LEVER	1
009	425814460	LIMIT SHAFT	1
010	425814100	LIMIT GUIDE	1
011	426303L7B	CONTROL LEVER CP	1
012	426305V30	LIMIT VALVE SHAFT WASHER	1
013	130802231	SPRING 26.5X42X3.5	2
014	136102174	VALVE GASKET	1
015	130212013	DRY BEARING DDK05-1212	1
016	130215012	DRY BEARING DDK05-1512	1
017	131706025	HEX.SOCKET HEAD CAP SCREW M6X25	8
018	131708028	HEX.SOCKET HEAD CAP SCREW M8X28	4
019	132406110	CROSS-RECESSED HEAD MACHINE SCREW M6X10	2
020	134501008	U-NUT M8	1
021	131307006	WASHER M6	2
022	131307012	WASHER M12	1
023	131101006	O-RING P-8	2
024	131101038	O-RING P-38	2
025	131103008	O-RING S-10	1
026	131103010	O-RING S-12	1
027	131103016	O-RING S-20	1
028	131103040	O-RING S-53	8
029	131103043	O-RING S-60	4
030	130606015	SPRING PIN 6X15	2
031	130302012	RETAINING RING S-12	1
032	425806J40	LIMIT SPOOL	1
033	425814J30	LIMIT SPOOL BUSH	1
034	426307AR0	LIMIT RETAINER	1
035	425814J50	LIMIT RETAINER F	1
036	426307Z50	SPRING SEAT	1
037	426307AS0	ADJUST COVER	1
038	130802232	SPRING 13.1X70X2.1	1
039	131705014	HEX.SOCKET HEAD CAP SCREW M5X14	4
040	132306025	HEX.SOCKET SET SCREW M6X25	1
041	134403106	HEX.NUT M6	1
042	131103016	O-RING S-20	1
043	131103022	O-RING S-28	5
044	130406005	PARALLEL PIN 4X10 H7	1
045	425814M2B	BRAKE VALVE CP	1
046	131103007	O-RING S-9	1
047	131103008	O-RING S-10	1
048	131103010	O-RING S-12	1

Fig. No.	Part Number	Part Name	Parts Per Hoist
049	131705014	HEX.SOCKET HEAD CAP SCREW M5X14	4
050	426305G80	VALVE SHAFT THRUST PLATE	1
051	130301032	RETAINING RING H-32	1
300	425814G6B	INLET BUSHING CP	1
301	136102177	UNDER GASKET	1
302	131708028	HEX.SOCKET HEAD CAP SCREW M8X28	4
303	132105005	HEX.SOCKET SET SCREW M5X5	4
304	131117143	O-RING AS568-143	1
305	131117144	O-RING AS568-144	1
320	425814470	UNDER COVER	1
321	425814G70	MAIN CUT BUSH	1
322	425814G80	MAIN CUT VALVE	1
323	425814G90	MAIN CUT CAP	1
324	425814H00	MAIN CUT HOLDER	1
325	136102178	MAIN CUT SEAT	1
326	137411114	SILENCER	2
327	425814940	MANI HOLD	1
328	131706308	HEX.SOCKET HEAD CAP SCREW M6X8	1
329	131705030	HEX.SOCKET HEAD CAP SCREW M5X30	3
331	132105022	HEX.SOCKET SET SCREW M5X22	1
332	134403205	HEX.NUT M5	2
333	134902012	HEX.SOCKET HEAD PLUG 1	2
334	130301065	RETAINING RING H-65	1
335	131103008	O-RING S-10	1
336	131103035	O-RING S-44	4
337	131103037	O-RING S-46	1
338	131103040	O-RING S-53	1
339	131115036	O-RING AS568-036	3
340	130604010	SPRING PIN 4X10	2
341	130606015	SPRING PIN 6X15	2
401	DRGPB-01	PENDANT BRACKET	1
402	P044	1/8 BSP FEMALE SOCKET	4
403	P071/1	1/8 BSP NIPPLE c/w 60° CONE	12
404	P016/1	1/8 BSP TO 1/4 HOSE-TAIL c/w SWIVEL	8
405	P002/1	1/4 HOSE FERRULE	8
406	1/4-HOSE	1/4 ANTI-STATIC RUBBER HOSE	4

▪ Red Rooster Lifting Limited ▪ Nauta House, The Meadows, Oldmeldrum, Aberdeenshire, AB51 0EZ ▪ Tel: +44 (0) 1651 872101 ▪

RED ROOSTER LIFTING

Cord Body -TMH-37.5T

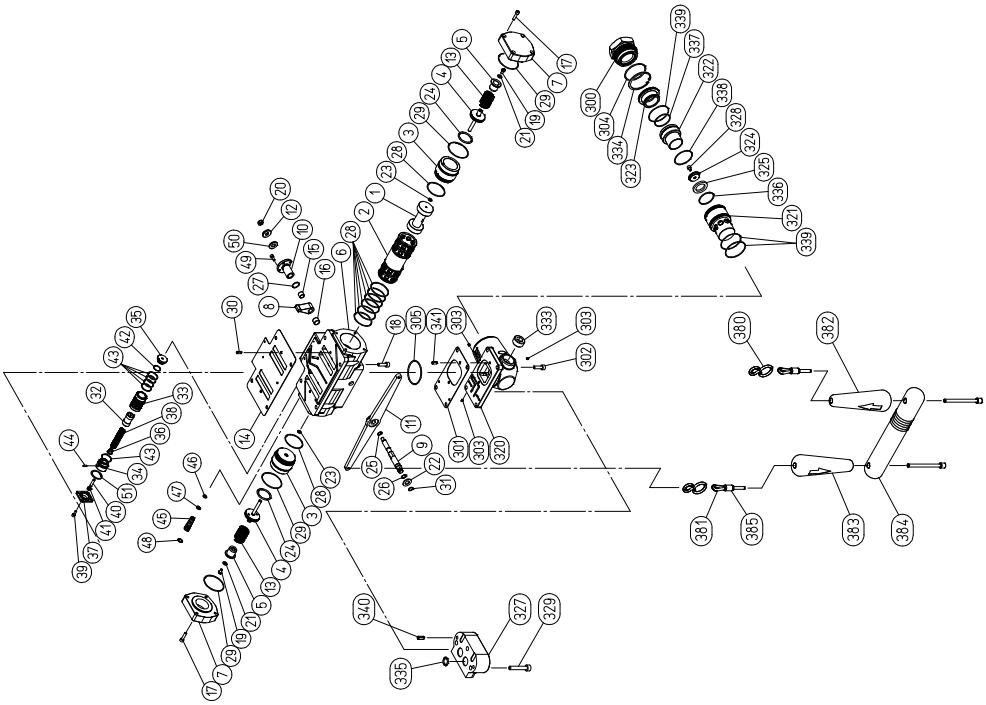

▪ Red Rooster Lifting Limited ▪ Nauta House, The Meadows, Oldmeldrum, Aberdeenshire, AB51 0EZ ▪ Tel: +44 (0) 1651 872101 ▪

RED ROOSTER LIFTING

Cord Body - TMH-37.5T

Fig. No.	Part Number	Part Name	Parts Per Hoist
001	425814010	MAIN SPOOL	1
002	425814C30	MAIN BUSH	1
003	425814C20	SPOOL CYLINDER	2
004	425814C60	SPOOL PISTON	2
005	425814C70	SPRING SHEET	2
006	425814060	VALVE BODY	1
007	425814080	SIDE COVER	2
008	425814140	LIMIT LEVER	1
009	425814460	LIMIT SHAFT	1
010	425814100	LIMIT GUIDE	1
011	426303L7B	CONTROL LEVER CP	1
012	426305V30	LIMIT VALVE SHAFT WASHER	1
013	130802231	SPRING 26.5X42X3.5	2
014	136102174	VALVE GASKET	1
015	130212013	DRY BEARING DDK05-1212	1
016	130215012	DRY BEARING DDK05-1512	1
017	131706025	HEX.SOCKET HEAD CAP SCREW M6X25	8
018	131708028	HEX.SOCKET HEAD CAP SCREW M8X28	4
019	132406110	CROSS-RECESSED HEAD MACHINE SCREW M6X10	2
020	134501008	U-NUT M8	1
021	131307006	WASHER M6	2
022	131307012	WASHER M12	1
023	131101006	O-RING P-8	2
024	131101038	O-RING P-38	2
025	131103008	O-RING S-10	1
026	131103010	O-RING S-12	1
027	131103016	O-RING S-20	1
028	131103040	O-RING S-53	8
029	131103043	O-RING S-60	4
030	130606015	SPRING PIN 6X15	2
031	130302012	RETAINING RING S-12	1
032	425806J40	LIMIT SPOOL	1
033	425814J30	LIMIT SPOOL BUSH	1
034	426307AR0	LIMIT RETAINER	1
035	425814J50	LIMIT RETAINER F	1
036	426307Z50	SPRING SEAT	1
037	426307AS0	ADJUST COVER	1
038	130802232	SPRING 13.1X70X2.1	1
039	131705014	HEX.SOCKET HEAD CAP SCREW M5X14	4
040	132306025	HEX.SOCKET SET SCREW M6X25	1
041	134403106	HEX.NUT M6	1
042	131103016	O-RING S-20	1
043	131103022	O-RING S-28	5
044	130406005	PARALLEL PIN 4X10 H7	1
045	425814M2B	BRAKE VALVE CP	1
046	131103007	O-RING S-9	1
047	131103008	O-RING S-10	1
048	131103010	O-RING S-12	1

Fig. No.	Part Number	Part Name	Parts Per Hoist
049	131705014	HEX.SOCKET HEAD CAP SCREW M5X14	4
050	426305G80	VALVE SHAFT THRUST PLATE	1
051	130301032	RETAINING RING H-32	1
300	425814G6B	INLET BUSHING CP	1
301	136102177	UNDER GASKET	1
302	131708028	HEX.SOCKET HEAD CAP SCREW M8X28	4
303	132105005	HEX.SOCKET SET SCREW M5X5	5
304	131117143	O-RING AS568-143	1
305	131117144	O-RING AS568-144	1
320	425814470	UNDER COVER	1
321	425814G70	MAIN CUT BUSH	1
322	425814G80	MAIN CUT VALVE	1
323	425814G90	MAIN CUT CAP	1
324	425814H00	MAIN CUT HOLDER	1
325	136102178	MAIN CUT SEAT	1
326	137411114	SILENCER	2
327	425816940	MANI HOLD	1
328	131706308	HEX.SOCKET HEAD CAP SCREW M6X8	1
329	131705030	HEX.SOCKET HEAD CAP SCREW M5X30	3
331	132105022	HEX.SOCKET SET SCREW M5X22	1
332	134403205	HEX.NUT M5	2
333	134902012	HEX.SOCKET HEAD PLUG 1	2
334	130301065	RETAINING RING H-65	1
335	131103008	O-RING S-10	2
336	131103035	O-RING S-44	4
337	131103037	O-RING S-46	1
338	131103040	O-RING S-53	1
339	131115036	O-RING AS568-036	3
340	130604010	SPRING PIN 4X10	2
341	130606015	SPRING PIN 6X15	2
380	130802081	S-TYPE WIRE (S)	2
381	138001015	THROTTLE VALVE CHANGE CORD (1.5M)	2
382	136602625	GRIP(W)	1
383	136602626	GRIP(R)	1
384	136602627	HANDLE	1
385	137249050	ROPE SLEEVE TA-85A	2

▪ Red Rooster Lifting Limited ▪ Nauta House, The Meadows, Oldmeldrum, Aberdeenshire, AB51 0EZ ▪ Tel: +44 (0) 1651 872101 ▪

RED ROOSTER LIFTING

Pendant - VRD-2R

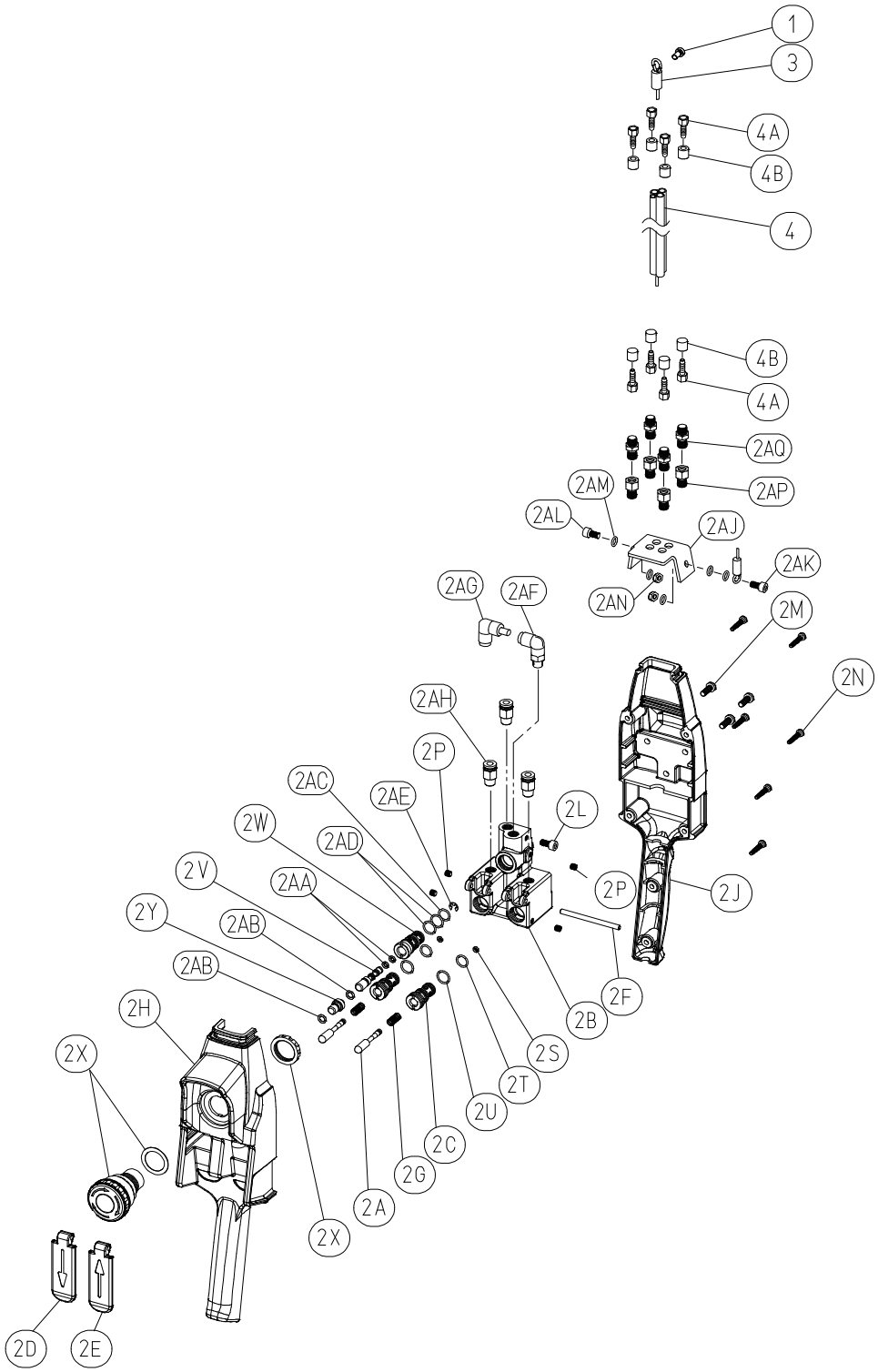

▪ Red Rooster Lifting Limited ▪ Nauta House, The Meadows, Oldmeldrum, Aberdeenshire, AB51 0EZ ▪ Tel: +44 (0) 1651 872101 ▪

RED ROOSTER LIFTING

Pendant - VRD-2R

Fig. No.	Part Number	Part Name	Parts Per Hoist
1	131705008	HEX. SOCKET HEAD CAP SCREW M5X8	1
2	420228VRD	PENDANT VALVE ASSEMBLY	1
2A	420218VB0	THROTTLE VALVE	2
2B	420228VR0	VALVE BODY	1
2C	420218VF0	BUSHING	2
2D	420223W40	LEVER D	1
2E	420223W30	LEVER U	1
2F	130402053	LEVER PIN	1
2G	130802220	SPRING 6X14X0.6	2
2H	420228W50	FRONT CASE	1
2J	420228W60	REAR CASE	1
2L	131705010	HEX. SOCKET HEAD CAP SCREW M5X10	1
2M	132405014	PHILLIPS PAN HEAD MACHINE SCREW M5X14	3
2N	132904220	PHILLIPS PAN HEAD SELF-TAPPING SCREW 4X20	6
2P	132105005	HEX. SOCKET SET SCREW M5X5	4
2S	131109001	O-RING S-3 (HS90)	2
2T	131103008	O-RING S-10	2
2U	131103009	O-RING S-11.2	2
2V	420224V61	EMERGENCY STOP VALVE	1
2W	420228V50	EMERGENCY STOP BUSHING	1
2X	136690503	EMERGENCY STOP BUTTON	1
2Y	420228W00	PUSH ROD	1
2AA	131103002	O-RING S-5	2
2AB	131103004	O-RING S-6	2
2AC	131103008	O-RING S-10	1
2AD	131103009	O-RING S-11.2	2
2AE	130303004	RETAINING RING E-4	1
2AF	304P	1/8 BSP TO 6MM PUSH FIT ELBOW	1
2AG	P118	6MM PLUG IN ELBOW	1
2AH	P087	1/8 BSP TO 6MM PUSH FIT	3
2AJ	DRG-SI10394-T2	2 STATION PENDANT BRACKET	1
2AK	113/1	HEX. SOCKET HEAD CAP SCREW M6X16	1
2AL	113P	HEX. SOCKET HEAD CAP SCREW M6X20	1
2AM	145P	FLAT WASHER M6	5
2AN	139P	NYLOC NUT M6	2
2AP	P245	6MM TO 1/8 BSP BULKHEAD ADAPTOR	4
2AQ	P071/1	1/8 BSP HEX NIPPLE C/W 60° CONE	4
3	426230F1B	STRAINER WIRE	1
4	1/4-HOSE	1/4 ANTI-STATIC RUBBER HOSE	4
4A	P016/1	1/8 BSP TO 1/8 HOSETAIL SWIVEL	8
4B	P002/1	1/4 HOSE FERRULE	8

▪ Red Rooster Lifting Limited ▪ Nauta House, The Meadows, Oldmeldrum, Aberdeenshire, AB51 0EZ ▪ Tel: +44 (0) 1651 872101 ▪

RED ROOSTER LIFTING

Pendant - VTP2M

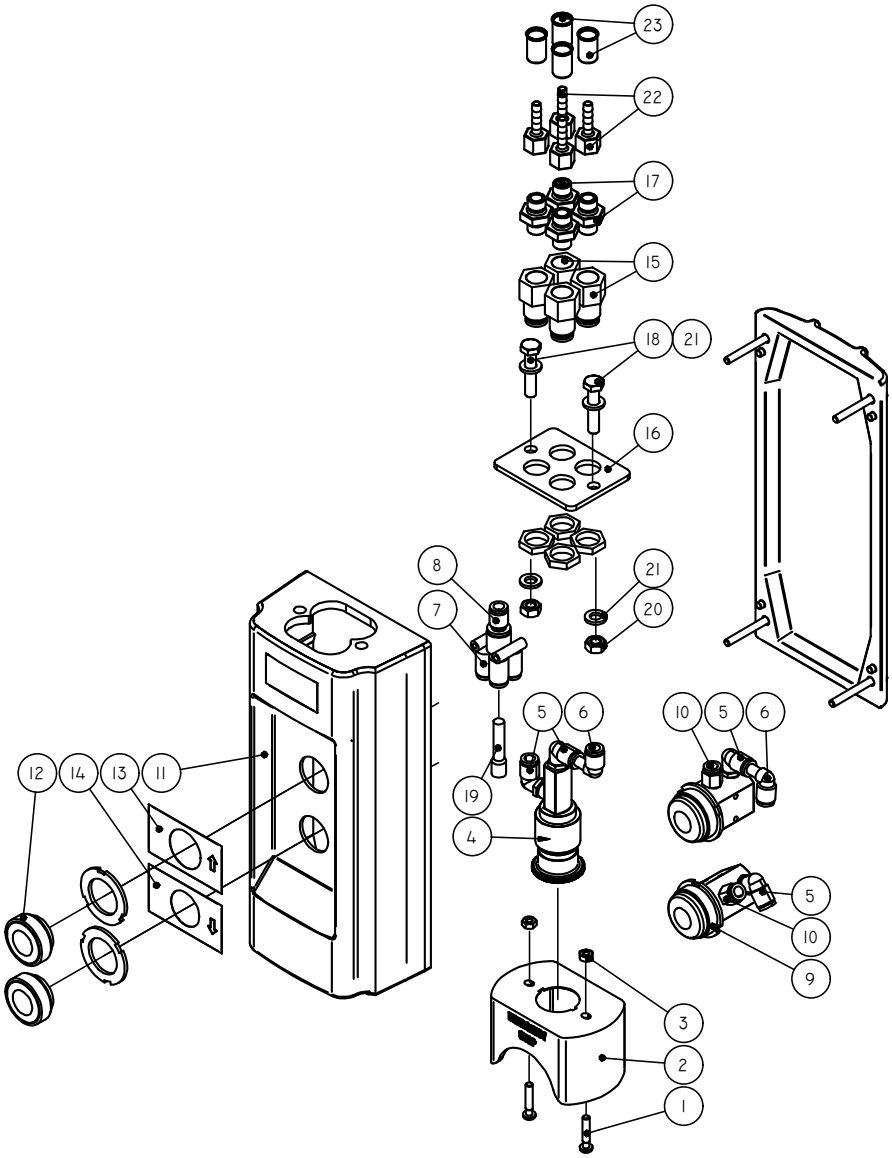

▪ Red Rooster Lifting Limited ▪ Nauta House, The Meadows, Oldmeldrum, Aberdeenshire, AB51 0EZ ▪ Tel: +44 (0) 1651 872101 ▪

RED ROOSTER LIFTING

Pendant - VTP2M

Fig. No.	Part Number	Part Name	Parts Per Hoist
1	105P	M4 X 20 CHEESE HEAD SCREW	2
2	E/STOP/GUARD01	YELLOW E-STOP GUARD	1
3	113/1P	M4 NYLOCK NUT	2
4	BIK3206P-BS54	EMERGENCY STOP BUTTON	1
5	304P	8mm TO 6mm BANJO	4
6	P118	90º ELBOW 6mm	2
7	P112	4 WAY JUNCTION	1
8	301P	8mm TO 6mm REDUCER	1
9	BIK-3209-P-VALVE	PENDANT VALVE	2
10	P087	1/8" TO 6mm PUSHFIT	2
11	TP/HOUS/M	2 STATION MACHINED PENDANT	1
12	BIK-3209-294-B-COVER	COVER FOR BIK VALVES	2
13	XAC-B-LEGEND-UP	UP LEGEND	1
14	XAC-B-LEGEND-DOWN	DOWN LEGEND	1
15	P245	1/8" TO 6mm BULKHEAD AND NUT	4
16	DRG 2652-01	PLATE	1
17	P071/1	1/8" BSP NIPPLE C/W CONE	4
18	112P	M6 x 20 HEX BOLT	2
19	P117	8mm BLANKING PLUG	1
20	139P	M6 NYLOCK NUT	2
21	145P	M6 WASHER	2
22	P016/1	1/8" BSP SWIVEL TO 1/4" HOSE TAIL	4
23	P002/1	1/4" HOSE FURRULE	4

▪ Red Rooster Lifting Limited ▪ Nauta House, The Meadows, Oldmeldrum, Aberdeenshire, AB51 0EZ ▪ Tel: +44 (0) 1651 872101 ▪

ACCESSORIES

ACCESSORIES

MAINS EMERGENCY STOP VALVES

ON TMH model hoists the mains valve can either be internal or mounted external to the hoist. As a mains emergency stop valve we use a range of 3/2 normally closed valves on pendant control hoists. These range from 0.5” to 1.5” depending on the hoist capacity but with the latest hoists having the valves built into the hoist they are only required on cord conversion to pendant hoists on hoists manufactured before 2014.

Valve models: 0.5” = VSA 3135-04, 0.75” = VSA3145-06, 1” = VPA 3165-10
UK Ex / ATEX version 0.75” = X773.32.11.1C, 0.75” = VJJ4306/2B, 1” = VJJ4703-2B

DUMP VALVES

On hoists fitted with 1/4” air hose in place of tubes, dump valves are fitted to the control lines to reduce operating delays.

Valve model: DV/0.25

FILTER SILENCING - TYPE AMC

This ensures clean plant air and reduces noise levels.

In areas where you do not want the exhaust air / oil to go freely into the atmosphere we can either pipe the exhaust air away to another room, fit a filter silencer unit, or a combination of both using the exhaust pipe with a filter silencer on the end of the hose.

- The filter removes 99.9% of oil from the exhaust air.
- The noise level is also reduced by the silencer and also with the exhaust noise.
- Temperature range 5°C to 60°C.
- The exhaust hose and filter should be at least one size larger than the incoming air supply hose.
- The exhaust cleaner must be mounted vertically.
- If the oil drop level decreases or after a period of 1 year the filter element.

AMC

Construction/Dimensions

Male thread

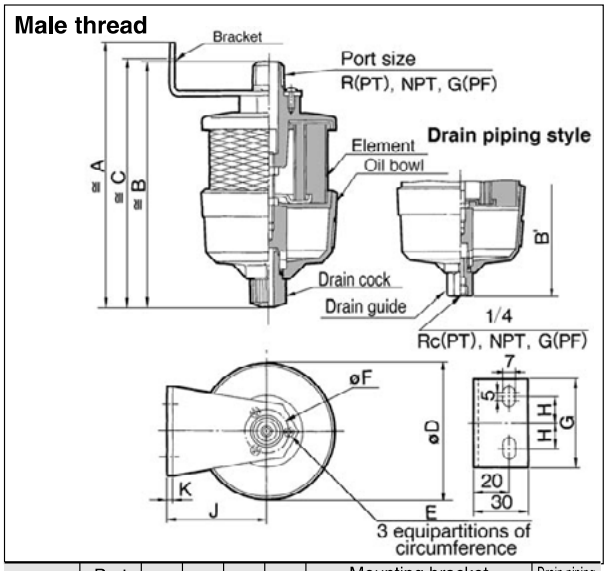

Model	Port size	A	B	C	D	Mounting bracket						Drain piping
						E	F	G	H	J	K	B'
AMC310	3/8	150.5	138.5	140.5	75	M3 Depth	24	50	15	55	2.3	141.5
AMC510	3/4	203.5	196.5	193.5	102	M4 Depth	40	70	20	70	3.2	199.5
AMC610	1	229.5	224.5	219.5	118	M4 Depth	48	70	20	80	3.2	227.5
AMC810	1 1/2	–	270	–	135	–	–	–	–	–	–	273
AMC910	2	–	327	–	153	–	–	–	–	–	–	330

Female thread

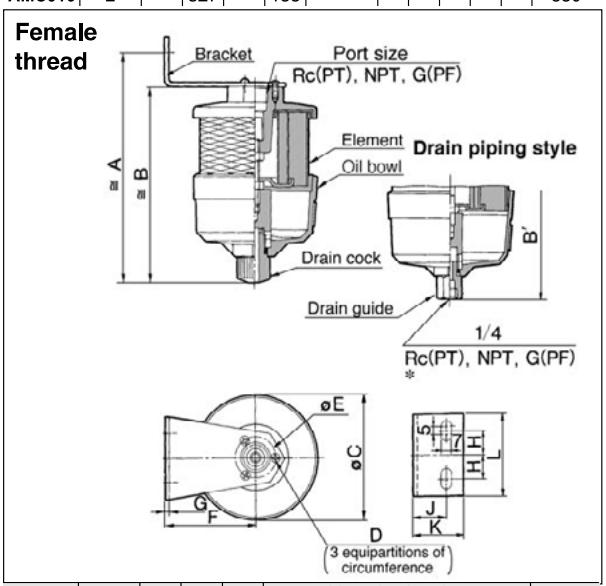

Model	Port size	A	B	C	Mounting bracket								Drain piping
					D	E	F	G	H	J	K	L	B'
AMC220	1/4	100	88	56	M3 Depth	22	40	2.3	15	12	20	50	73*
AMC320	1/4, 3/8	140.5	120.5	75	M3 Depth	24	55	2.3	15	20	30	50	123.5
AMC520	1/2, 3/4	193.5	173.5	102	M4 Depth	40	70	3.2	20	20	30	70	176.5

* On the AMC220, an R(PT)1/4 fitting can be attached by removing the drain cock.

Flow Characteristics

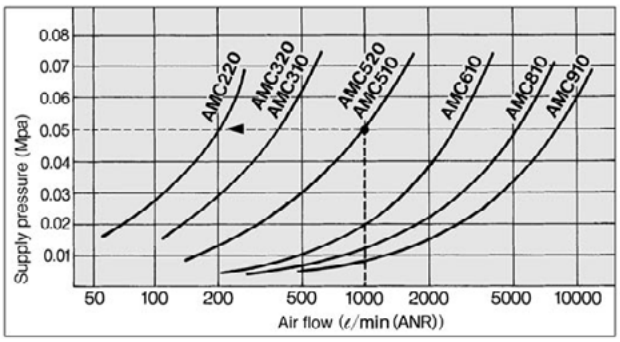

How to view the diagram: If the AMC510 is operated at a flow volume of 1000 ℓ/min (ANR), the supply pressure will be 0.05MPa.

⚠Precautions

Design

⚠Warning

① The exhaust port could become blocked by the clogging of the exhaust cleaner. Therefore, make sure to provide a safe design so as not to cause the whole system to malfunction.

⚠Caution

① If this will be used with a centralized piping system, calculate the **peak** maximum air consumption by including the actuators that operate simultaneously and the capacity of the piping that is connected. Then, select a model so that the calculated value will be less than the maximum flow volume of the **exhaust cleaner.** (Select a style with ample capacity because the exhaust speed will decrease when the **element** becomes clogged.)

② The silencing effect could vary depending on the pneumatic circuit or the pressure that is used.

③ Operate at a back pressure (Supply pressure) of 0.1MPa or less.

④ The attached bracket is for supporting the exhaust cleaner body. Thus, it cannot support the piping or other items. If these items need to be supported, provide an additional support.

Mounting

⚠Caution

① An exhaust cleaner must be mounted vertically. If it is mounted diagonally, laterally, or inverted, the oil that is separated by the element will splash on the surroundings.

Maintenance

⚠Caution

① If the exhaust speed drops and the system performance decreases due to clogging, replace with a new element. Make sure to verify the operating condition of the actuator at least once a day.

② The replacement interval for the element is before the internal pressure during exhaust reaches 0.1MPa or after 1 year of operation, whichever comes first.

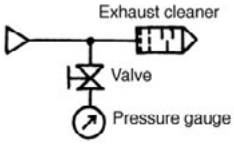

- Provide a branch on the supply side of the exhaust cleaner to mount a valve and a pressure gauge.
- During inspection, open the valve and check the pressure at the time of exhaust discharge. (The **valve** must remain closed except for inspection. The pressure gauge could break if the valve remains open.)

AIR SERVICE EQUIPMENT

An air set should be used with all Red Rooster hoists and trolleys.

AIR SERVICE UNITS:

The correct size of air service unit for each hoist type is stated in the table on page 4. The air service unit must be installed with the lubricator unit down line from the filter unit. The unit should be installed at the hoist inlet port or within eight metres of inlet port. (Siting the unit further away or well below the hoist will result in lubricant being deposited on the internal walls of the supply line and hence it will be necessary to increase the lubricant rate above the levels specified (see section 1.2) to ensure adequate lubrication of the hoist. The ambient temperature range is -5°C to +60°C (with no freezing).

FILTER UNIT (WATER TRAP)

Manual drain units
As the name implies, these units must be drained by the operator as the filter bowl becomes full of water. The frequency of draining is entirely dependent upon the usage of the hoist and the moisture level of the air supply. ⚠ **CAUTION**

In clean environments e.g. laboratories, paint spray booths, manual drain filters are essential to prevent contamination.

Automatic drain units
These units are automatically self-purging. When the filter bowl is full it will automatically drain itself. Although very convenient to the user, the unit must be sited such that either the purged water is captured by a tray or it purges into an area away from personnel, equipment (particularly electrical equipment) and goods. If contamination from purged water is not a problem then automatic drain units should be selected.

Failure to fit and drain the filter will result in excessive moisture being carried into the hoist valve, motor and brake actuator resulting in internal corrosion and premature failure. ⚠ **DANGER**

LUBRICATOR UNIT

There are two types of lubricator available.

Oil mist lubricator
The preferred type, and essential where the lubricator must be sited some distance from the hoist. The unit produces atomised oil particles which remain in suspension in the air longer.

Droplet Lubricator
Due to the larger particle size of the droplets, these may only be used where the lubricator is close to the coupled hoist.

Failure to fit a lubricator and maintain the correct oil flow will result in rapid wear of the rotor vanes within the motor, excessive heat generation and failure of the air motor within a very short period. ⚠ **DANGER**
Keep the lubricator topped up with a light turbine oil. ⚠ **DANGER**

WORKING PRINCIPLE AND ADJUSTMENT

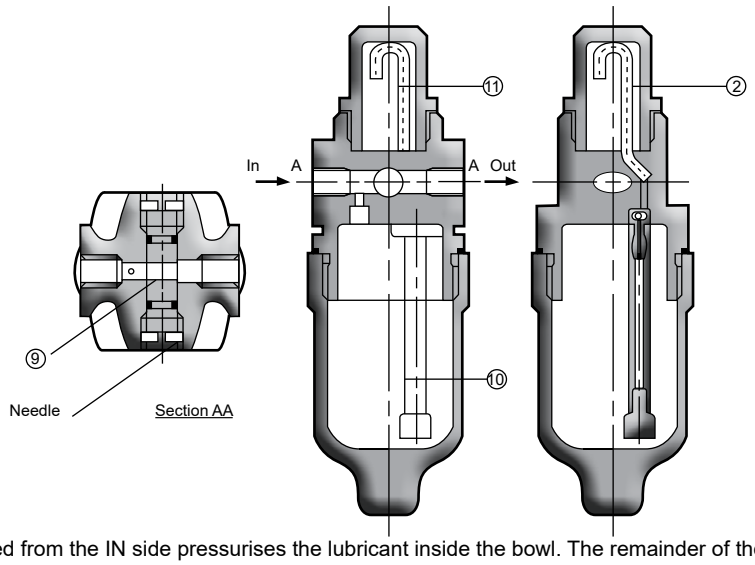

A portion of the air introduced from the IN side pressurises the lubricant inside the bowl. The remainder of the air passes through the needles (9), and flows to the OUT side. The pressure differential between the inside of the bowl and the inside of the sight dome (2), causes the lubricant inside the bowl into the oil passage (10). The lubricant drips from the dripping tube (11), and lubricate the OUT side. The amount of lubricant is adjusted by the needle (9), on the front face. Turning the needle clockwise increases the amount of lubricant, and turning it counter clockwise until fully opened shuts off the lubricant. The needle on the side that is not used should be left fully opened.

REGULATOR UNIT

Most compressors are supplied with a regulator on the output. However, where a number of different pneumatic tools are supplied from the same compressor it is good practice to maintain the supply line or remain at a higher pressure and to fit a regulator to the supply at each tool.

The operating pressures stated for the air hoist are the pressures required at the hoist inlet manifold. Subject to the type of airline, a pressure drop in the line between 0.1 and 0.35 bar (2 and 5 p.s.i) per 10 metres of line should be anticipated (as a result of the frictional resistance of the walls).

MOUNTING / ADJUSTMENT - WARNING

1. Set the regulator while verifying the displayed values of the inlet and outlet pressure gauges. Turning the regulator knob excessively can cause damage to the internal parts.
2. Do not use tools on the pressure regulator knob as this may cause damage. It must be operated manually.

MOUNTING / ADJUSTMENT - CAUTION

1. Be sure to unlock the knob before adjusting the pressure and lock it after setting the pressure. Failure to follow this procedure can cause damage to the knob and the outlet pressure may fluctuate.

- Pull the pressure regulator knob up to unlock. (You can visually verify this with the ‘orange mark’ that appears in the gap.)
- Push the pressure regulator knob down to lock. When the knob is not easily locked, turn it left and right a little and then push it. (When the knob is locked, the ‘orange mark’, i.e. the gap will disappear.)

2. Pulsation will generate when the difference between the inlet and the outlet pressure is large. In this case, reduce the pressure difference between the inlet and the outlet. Please consult with SMC if pulsation problem is not resolved.

3. When the bowl is installed, install them so that the lock button lines up to the groove of the front (or the back) of the body to avoid dropping or damage of the bowl.

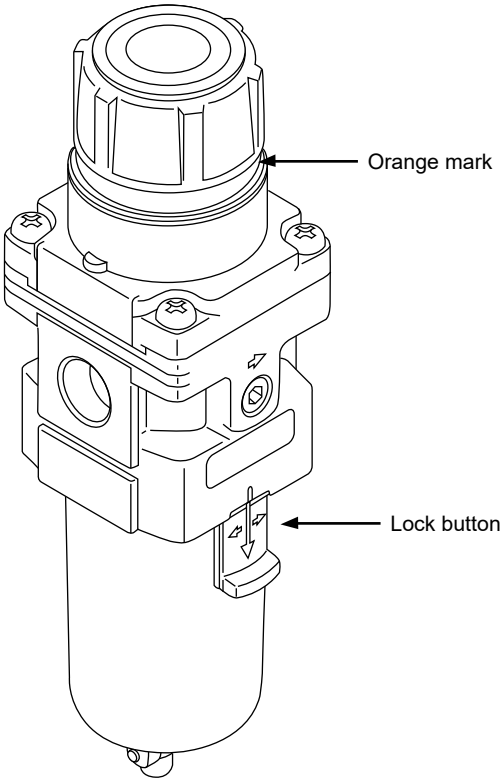

Image for illustration purposes only

LOG BOOK

PNEUMATIC HOIST AND TROLLEY INSPECTION REQUIREMENTS

Pneumatic hoists, trolleys and overhead cranes should be inspected as specified in the 'Supply of Machinery (Safety) Regulations 2008 and The Provision of Use of Powered Machinery (PUWER) S12306 sections 5 & 6 and the results recorded in the log book.

External inspection by a competent person every 12 months or as per the examination scheme. The Lifting Operations and Lifting Equipment Regulations S12306 - 1998.

DAILY OR SHIFT INSPECTION

At the same time each day at the start of each working day of shift operator should carry out a basic inspection of the equipment, its operation and lubrication as required.

MONTHLY OR 3 MONTHLY CHECKS

Depending on the frequency of use and the working conditions, inspection and maintenance should be done at suitable intervals to ensure any deterioration of the equipment will be detected and remedied in good time.

ANNUAL INSPECTION

A competent person with the requisite knowledge of the equipment should carry out a full inspection of powered lifting equipment every 12 months or after any exceptional circumstances which could jeopardize the safety of the lifting equipment. A report should be issued and sent to the customer / employer.

DAILY HOIST AND TROLLEY INSPECTION REQUIREMENTS

The items listed below are intended as a guide for performing daily visual inspections of the components that have a direct bearing on the safety of the hoist and or trolley where the status may change with day to day use. The equipment items listed below do not necessarily need to be restricted to these items, but they should form the basis of the inspection.

OPERATING CONTROLS:	Check for malfunction, excessive wear, broken or damaged components and control function labels.
HOIST CHAIN:	Check chain lubrication, twisted chains (multi fall blocks).
AIR SET:	Check oil level indicator.
SAFETY CATCHES:	Check operation and for damage.
NOISE / OPERATION:	Check for any unusual noise and speeds during function tests.
HOIST OPERATION:	Check the hoist starts and stops quickly.

EXTRA CHECKS FOR TROLLEY

OPERATION:	Check movement and control of the trolley (no load).
TROLLEY MOVEMENT:	Check the trolley moves smoothly along the beam.

CHECKS ON UK Ex / ATEX EQUIPMENT

In addition to the standard checks UK Ex / ATEX hoists and trolleys should also have the following checks carried out:

Check the Bronze, Copper or Zinc coating of the hook is not damaged or worn (or the bottom block for IIC/IIIC equipment).
Check safety catches.
Check the UK Ex / ATEX rating on the nameplate is still legible.
Check the rubber buffers or limits on the trolley are in good condition.
Check the condition of the Bronze trolley wheels.
Check the condition and setting of the anti-tip rollers.
Check air supply lines and control lines for fitting, wear or damage.
Check load chain for excessive corrosion.
Check hoist body for excessive corrosion.

PNEUMATIC HOIST AND TROLLEY MAINTENANCE REQUIREMENTS

TO BE CARRIED OUT MONTHLY OR THREE MONTHLY DEPENDING ON THE HOIST WORKING CONDITIONS

DAMAGE:	External inspection of hoist for damage or wear.
HOIST CHAIN:	Check chain lubrication, twisted chains (multi fall blocks) and excessive wear or damaged chain links. (Light mineral oil).
HOOKS:	Check hooks swivel, hook opening and safety catch.
AIR SET:	Check and fill up lubricator bowl and adjust drop rate as required.
FITTINGS/HOSES:	Check all air-line fitting are secure and there are no air leaks.
BOLTS:	Check security of bolts, chain collector and chain anchor.
AIR MOTOR:	Check air motor and silencers - replace as required.
OPERATION:	Function test hoists running speed and control operation without load and then check lifting a load of around 50% of SWL to check brake operation and controls when loaded.
LIMIT SWITCHES:	Check operation of upper and lower limits at slow speed.

EXTRA CHECKS FOR TROLLEY

RUNWAY BEAM:	Check the beam is smooth and flat without obstruction and that the end stops are in place and secure.
DIVE PINION:	Check drive pinion and wheels are fitting correctly and not worn, grease if required.
ADJUSTMENT:	Check flange adjustment, anti tilt roller setting, load bar nuts - adjust or tighten if required,
AIR LINES:	Check security of control lines and supply hoses and fittings.
OPERATION:	Function test over the complete range of travel.
SUPPLY HOSES:	Check air lines are supported and the weight is not hanging from the air set.
TROLLEY CHAIN:	Check geared trolley hand chain and drive.

When detecting any abnormality during inspection due to erroneous use, instruct the operator and user for correct use of the chain hoist.

LOG BOOK

RED ROOSTER LIFTING

DAILY VISUAL INSPECTION REQUIREMENTS

	MONTH:															YEAR:															
DAY	1	2	3	4	5	6	7	8	9	10	11	12	13	14	15	16	17	18	19	20	21	22	23	24	25	26	27	28	29	30	31
AIR HOIST CHECKS																															
HOOK SWIVEL																															
AIR LEAKS																															
AIR SET LUBRICATION																															
SAFETY CATCHES																															
NOISE / OPERATION																															
PENDANT OPERATION / E-STOP																															
CHAIN LUBRICATION																															
CHAIN NUT TWISTED																															
SUPPLY HOSE																															
CHAIN COLLECTOR																															
TROLLEY CHECKS																															
OPERATION / NOISE																															
FESTOON SYSTEMS																															
MOVEMENT (IF FITTED)																															
OPERATOR'S NAME																															
1.																															
2.																															
3.																															
4.																															

COMMENTS	INITIALS	DATE

LOG BOOK	RED ROOSTER LIFTING

MAINTENANCE CHECKS

TO BE CARRIED OUT MONTHLY IN PRODUCTION OPERATIONS WHERE HEAVILY USED OR IN HARSH WORKING CONDITIONS.
TO BE CARRIED OUT THREE MONTHLY WHEN THE HOIST IS ONLY USED OCCASIONALLY.

PLEASE CONTACT RED ROOSTER TO CONFIRM IF MONTHLY OR THREE MONTHLY MAINTENANCE CHECKS ARE REQUIRED IF YOU ARE NOT SURE.

MONTHLY / 3 MONTHLY CHECKS CARRIED OUT AS PER MANUAL	NAME	DATE

RED ROOSTER
LIFTING

Head Office:
Nauta House
The Meadows
Oldmeldrum
Aberdeenshire, AB51 0EZ

T: +44 (0) 1651 872101
E: sales@redroosterlifting.com
W: **www.redroosterlifting.com**

Depot:
Unit 26
Kelvin Way Trading Estate
Kelvin Way
West Bromwich, B70 7TW

T: +44 (0) 121 525 4162